EULYNX

EULYNX Initiative

Requirements specification for SCI-ILS

Document number: Eu.Doc.41
Version: 4.3 (0.A)

© EULYNX Partners

Contents

1 Introduction **1**
1.1 Release information 1
1.2 Impressum 1
1.3 Purpose 1
1.4 Applicable standards and regulations 2
1.5 Applicable documents 2
1.6 Terms and abbreviations 2
1.7 Variability management 2
1.8 Definition of object types 2
1.9 Modelling 2

2 Conditions of use **3**
2.1 General 3
2.2 Border Interfaces 3

3 Functional requirements specification **3**
3.1 SCI-ILS - Logical Viewpoint 3
3.2 SCI-ILS - Information Flows 4
3.3 SCI-ILS - Functional Viewpoint 9
3.3.1 SCI-ILS - Functional Context 9
3.3.2 SCI-ILS - Functional Partitioning 34
3.3.3 SCI-ILS - Functional Architecture 34
3.3.4 SCI-ILS - Functional Entities 36

4 Configuration requirements **46**
4.1 Boundary 47
4.2 Direction 47
4.3 Route 47
4.4 Overlap 47
4.5 Activation Zone 47
4.6 Approach Zone 47

ID	Type	Requirement Part 1	Requirement Part 2	Appl.	JIRA	V 4.3 (0.A) > V 4.2 (1.A)
Eu.ILS.1145	Head	**1 Introduction**		Default		
Eu.ILS.1147	Head	**1.1 Release information**		Default		
Eu.ILS.1148	Info	[Eu.Doc.41] Requirements specification for SCI-ILS CENELEC Phase: 4 Version: 4.3 (0.A) Approval date: 29.05.2024		Default		**Object Text:** [Eu.Doc.41] Requirements specification for SCI-ILS CENELEC Phase: 4 Version: 4.~~2~~3 (~~1~~0.A) Approval date: 29.05.2024
Eu.ILS.1149	Info	**Version history**		Default		
Eu.ILS.4165	Info	version number: 4.0 (0.A) date: 16.05.2022 author: Dennis Kunz, Martin Herz model version: 18 Generic interface and subsystem requirements for SCI version: 1.0 (0.A) review: CCB changes: EUILS-268, EUILS-269, EUILS-270, EUILS-271, EUILS-272, EUILS-273, EUILS-274		Default		
Eu.ILS.4177	Info	version number: 4.1 (0.A) date: 05.04.2023 author: Dennis Kunz model version: 21 Generic interface and subsystem requirements for SCI version: 1.0 (1.A) review: cluster changes: EUILS-278, EUILS-279, EUILS-280, EUILS-282, EUILS-283		Default		
Eu.ILS.4215	Info	version number: 4.2 (0.A) date: 26.06.2023 author: Dennis Kunz model version: 22 Generic interface and subsystem requirements for SCI version: 1.0 (3.A) review: CCB changes: EUILS-279, EUILS-284, EUILS-285, EUILS-286, EUILS-287, EUILS-290, EUILS-292		Default		
Eu.ILS.4222	Info	version number: 4.2 (1.A) date: 15.12.2023 author: Dennis Kunz model version: 25 Generic interface and subsystem requirements for SCI version: 1.0 (4.A) review: M&T changes: EUILS-277, EUILS-296, EUILS-297, EUILS-298, EUILS-299, EUILS-300, EUILS-301		Default		
Eu.ILS.4249	Info	version number: 4.2 (2.B) date: 30.04.2024 author: Dennis Kunz model version: 26 Generic interface and subsystem requirements for SCI version: 1.0 (5.A) review: cluster changes: EUILS-276, EUILS-305, EUILS-307, EUILS-309, EUILS-311, EUILS-312		Default		object created after baseline 4.2 (1.A)
Eu.ILS.4271	Info	version number: 4.3 (0.A) date: 18.06.2024 author: Dennis Kunz model version: 26 Generic interface and subsystem requirements for SCI version: 1.1 (0.A) review: TACS Mirror Group changes: EUILS-313, EUILS-314		Default		object created after baseline 4.2 (1.A)
Eu.ILS.1152	Head	**1.2 Impressum**		Default		
Eu.ILS.1153	Info	Publisher: **EULYNX Initiative** A full list of the **EULYNX Partners** can be found on https://eulynx.eu/.		Default	EUILS-311	**Object Text:** Publisher: EULYNX Initiative A full list of the EULYNX Partners can be found on ~~www.~~https://eulynx.eu~~/index.php/members~~. **a_JIRA_BL4R3:** EUILS-311
Eu.ILS.1154	Info	Responsible for this document: EULYNX Project Management Office www.eulynx.eu		Default		
Eu.ILS.1189	Info	Copyright EULYNX Partners All information included or disclosed in this document is licensed under the European Union Public Licence EUPL, Version 1.2 or later.		Default		
Eu.ILS.1155	Head	**1.3 Purpose**		Default		

ID	Type	Requirement Part 1	Requirement Part 2	Appl.	JIRA	V 4.3 (0.A) > V 4.2 (1.A)
Eu.ILS.1156	Info	The purpose of the document is the specification of requirements for the interface SCI-ILS for the development of the EULYNX System.		Default		
Eu.ILS.1160	Info	This document describes functional requirements for the interface SCI-ILS.		Default		
Eu.ILS.1161	Info	This document is intended for the following users: • safety authorities • infrastructure managers • safety accessors • signalling system suppliers • validators		Default		
Eu.ILS.1162	Info	This document is the basis for the implementation by the supplier and for approval by the infrastructure manager.		Default		
Eu.ILS.1164	Head	**1.4 Applicable standards and regulations**		Default		
Eu.ILS.1163	Info	A list of applicable standards and regulations used in EULYNX is listed in the EULYNX Reference Document List [Eu.Doc.12].		Default		
Eu.ILS.1165	Head	**1.5 Applicable documents**		Default		
Eu.ILS.1166	Info	The current versions of documents used as input or related to this document are listed in the EULYNX Documentation Plan [Eu.Doc.11]. The relationships between the documents are displayed in the Appendix A1 Documentation plan and structure [Eu.Doc.11_A1].		Default		
Eu.ILS.1179	Head	**1.6 Terms and abbreviations**		Default		
Eu.ILS.1180	Info	The terms and abbreviations are listed in the EULYNX Glossary [Eu.Doc.9].		Default		
Eu.ILS.1186	Head	**1.7 Variability management**		Default		
Eu.ILS.1187	Info	Applicability column indicates the applicability of the requirement or information object per EULYNX partner. Value "Default" means the object applies to all EULYNX partners. Value "IM code" means the object applies specifically to the stated EULYNX partner. Value "-" indicates that this requirement is part of the chapters of the state machine modelling. The state machine itself defines the applicability of each transition. If there are no FlowPorts which describe the different applicabilities, the whole state machine is default. IM codes follow the pattern "abcdyz", where abcd is the UIC numeric code for railway companies and yz is by default "00".		Default		
Eu.ILS.1285	Head	**1.8 Definition of object types**		Default		
Eu.ILS.1286	Info	The following definition for object types is applied in this document:		Default		
Eu.ILS.1287	Info	• "Req" - This denotes a mandatory requirement.		Default		
Eu.ILS.4223	Info	• "Def" - This denotes referenceable model elements that are used in the model-based creation of requirements		Default		
Eu.ILS.1288	Info	• "Info" - This denotes additional information to help understand the specification. These objects do not specify any additional requirements.		Default		
Eu.ILS.1289	Info	• "Head" - This denotes chapter headings.		Default		
Eu.ILS.1181	Head	**1.9 Modelling**		Default		
Eu.ILS.1182	Info	The section "Functional requirements specification" follows a model based systems engineering process using Systems Modelling Language (SysML) and defines the information objects (stimuli and responses) exchanged over the SCI-ILS interface.		Default		
Eu.ILS.1184	Info	The diagrams presented in this document are modelled in SysML [SysML].		Default		
Eu.ILS.1355	Info	The rules for the interpretation of the model based parts of specification are defined in [Eu.Doc.29].		Default		
Eu.ILS.1352	Info	In chapter 3 "Functional requirements specification" the functional system requirements, defined in the form of a SysML model in the PTC Integrity Modeler are depicted as a surrogate of this model in the form of DOORS-objects.		Default		
Eu.ILS.1353	Info	A requirement thereby consists of the respective SysML model element, for instance a SysML diagram, and if necessary an additional extension of the requirement.		Default		
Eu.ILS.1354	Info	In the column “Requirement Part 1” the particular SysML model element is depicted and in the column “Requirement Part 2” the corresponding extension of the definition is given. The stated object type normally applies both to “Requirement Part 1” and to “Requirement Part 2”.		Default		
Eu.ILS.1356	Info	There are requirements with type "Req" given, where the column "Requirement Part 2" or a part of it is provided with the heading "Information". In this case, the defined type only applies to the column "Requirement Part 1" and the part of "Requirement Part 2", which is not labelled as "Information".		Default		
Eu.ILS.4224	Info	State machines or several state machines linked together in a Functional Architecture define the totality of all functional requirements of an SUS or an SIUS in a coherent and consistent manner. State diagrams of a corresponding state machine are marked with the object type “Req”. For the later design and implementation, it is not the description language SysML that is binding, but the domain-specific meaning expressed by it. The specified behaviour can be converted into a vendor specific language but must retain the domain specific meaning describing the functional requirements. The specific model elements are additionally specified and defined by object type “Def” to allow for traceability to supplier designs or test cases. The compliance of products to the specifications must be demonstrated by testing against EULYNX test cases, which are derived from the functionality specified by the models.		Default	EUILS-314	**Object Text:** State machines or several state machines linked together in a Functional Architecture define the totality of all functional requirements of an SUS or an SIUS in a coherent and consistent manner. State diagrams of a corresponding state machine are marked with the object type “Req”. For the later design and implementation, it is not the description language SysML that is binding, but the domain-specific meaning

© EULYNX Partners

ID	Type	Requirement Part 1	Requirement Part 2	Appl.	JIRA	V 4.3 (0.A) > V 4.2 (1.A)
						expressed by it. The specified ~~behavior~~behaviour can be converted into a vendor specific language but must retain the domain specific meaning describing the functional requirements. The specific model elements are additionally specified and defined by object type "Def" to allow for traceability to supplier designs or test cases. The compliance of products to the specifications must be demonstrated by testing against EULYNX test cases, which are derived from the functionality specified by the models. **a_JIRA_BL4R3:** EUILS-314
Eu.ILS.1144	Head	**2 Conditions of use**		Default		
Eu.ILS.1188	Info	The specifications defined in this document shall follow the requirements of the EULYNX System Architecture Specification [Eu.Doc.16].		Default		
Eu.ILS.1389	Req	The specifications defined in this document shall be complemented by the generic requirements specified in Generic interface and subsystem requirements for SCI [Eu.Doc.119].		Default		
Eu.ILS.3894	Req	All references to [Eu.Doc.119] refer to version 1.1 (0.A) of that document.		Default	EUILS-305 EUILS-312	**Object Text:** All references to [Eu.Doc.119] refer to version 1.~~0~~1 (~~4~~0.A) of that document. **a_JIRA_BL4R3:** EUILS-305 EUILS-312
Eu.ILS.1311	Head	**2.1 General**		Default		
Eu.ILS.1297	Info	The SCI-ILS is specified to be used in stations and on the line. Detailed applications are defined by national requirements. Further explanations regarding the terminology and intended applications of SCI-ILS are described in chapter 3 and 7 of [Eu.Doc.10].		Default		
Eu.ILS.1300	Info	The adjacent system Adjacent Interlocking System can be a Subsystem - Electronic Interlocking of another EULYNX System or a legacy interlocking system.		Default		
Eu.ILS.1301	Info	If the adjacent system Adjacent Interlocking System is a legacy interlocking system then it also shall support the SCI-ILS to communicate with the EULYNX System.		Default		
Eu.ILS.1298	Info	The SCI-ILS uses one Process Data Interface protocol connection between the Subsystem - Electronic Interlocking of the EULYNX System and the adjacent system Adjacent Interlocking System.		Default		
Eu.ILS.1303	Info	Through this one Process Data Interface protocol connection, the SCI-ILS handles multiple tracks and multiple interlocking system boundaries with one boundary for each track. Requirements regarding the configuration of the boundaries are defined in chapter 4. Further information about interlocking system boundaries including explaining track plans is given in [Eu.Doc.10].		Default		
Eu.ILS.3896	Info	The SCI-ILS is an interface between two equal partners. The actors Subsystem - Electronic Interlocking and Adjacent Interlocking System can be interchanged, depending on the point of view.		Default		
Eu.ILS.4005	Info	In the Use Case 'Initialisation', configuration data must define which of the two equal partners acts as primary, respectively secondary communication partner. In this document, the primary communication partner is always shown as the Adjacent Interlocking System, the secondary communication partner is always shown as Subsystem - Electronic Interlocking.		Default		
Eu.ILS.4173	Head	**2.2 Border Interfaces**		Default		
Eu.ILS.4174	Info	When EULYNX is applied on a cross border railway line, EULYNX interfaces can exist between subsystems or adjacent systems that belong to different IMs.		Default		
Eu.ILS.4175	Info	To ensure consistent communication and functionality, a set of harmonised requirements to describe cross border interface functionality shall be agreed by both IMs.		Default		
Eu.ILS.4176	Info	The subset marker "yz" of the IM code can be used to mark applicability information consistent with the cross border interface functionality by each IM.		Default		
Eu.ILS.3	Head	**3 Functional requirements specification**		Default		
Eu.ILS.1829	Head	**3.1 SCI-ILS - Logical Viewpoint**		Default		

© EULYNX Partners

ID	Type	Requirement Part 1	Requirement Part 2	Appl.	JIRA	V 4.3 (0.A) > V 4.2 (1.A)
Eu.ILS.32	Def	[Package] SCI-ILS - Logical Context [Logical Viewpoint - Interface Definition] 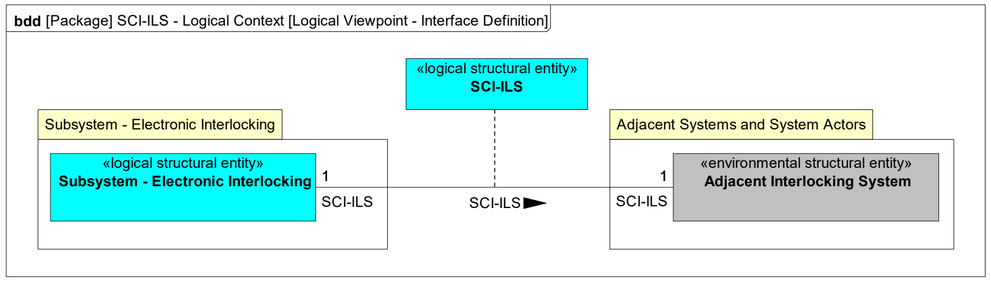 		Default		
Eu.ILS.4270	Req	The logical interface SCI-ILS shall provide a connection of exactly one Subsystem - Electronic Interlocking and one Adjacent Interlocking System.		Default	EUILS-307	object created after baseline 4.2 (1.A)
Eu.ILS.5	Head	**3.2 SCI-ILS - Information Flows**		Default		
Eu.ILS.4172	Info	The generic commands and messages through the SCI-ILS are specified in [Eu.Doc.119].		Default		
Eu.ILS.4008	Def	[Package] SCI-ILS - Information Flows [Interface Requirements - Directions Of Exchanged Information Objects (Internal)] 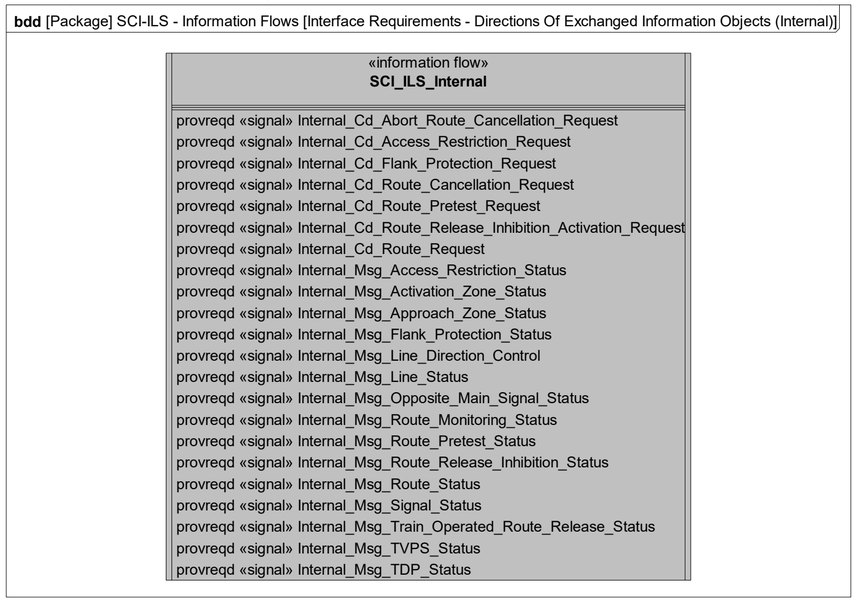 		Default	EUILS-276	**a_JIRA_BL4R3:** EUILS-276
Eu.ILS.4022	Def	Internal_Cd_Access_Restriction_Request		007000 007400 007800 007900 008200 310900	EUILS-313	**a_Applicability_auto:** 007000 007400 007800 007900 008200 310900 **a_JIRA_BL4R3:** EUILS-313
Eu.ILS.4023	Def	Internal_Cd_Flank_Protection_Request		007000 007400 007800 007900 008400 008800 310900	EUILS-313	**a_Applicability_auto:** 007000 007400 007800 007900 008400 008800 310900 **a_JIRA_BL4R3:** EUILS-313
Eu.ILS.4024	Def	Internal_Cd_Route_Cancellation_Request		007000 007400 007800 007900 008000	EUILS-313	**a_Applicability_auto:** 007000 007400 007800

ID	Type	Requirement Part 1	Requirement Part 2	Appl.	JIRA	V 4.3 (0.A) > V 4.2 (1.A)
				008200 008400 008800 310900		007900 008000 008200 008400 008800 310900 **a_JIRA_BL4R3:** EUILS-313
Eu.ILS.4025	Def	Internal_Cd_Route_Pretest_Request		007000 007400		
Eu.ILS.4026	Def	Internal_Cd_Route_Release_Inhibition_Activation_Request		007400		
Eu.ILS.4027	Def	Internal_Cd_Route_Request		Default		
Eu.ILS.4028	Def	Internal_Msg_Access_Restriction_Status		007000 007400 007800 007900 008000 008200 310900	EUILS-313	**a_Applicability_ auto:** 007000 007400 007800 007900 008000 008200 310900 **a_JIRA_BL4R3:** EUILS-313
Eu.ILS.4029	Def	Internal_Msg_Activation_Zone_Status		Default		
Eu.ILS.4030	Def	Internal_Msg_Approach_Zone_Status		007000 007400 007800 007900 008000 008200 008400 008800 310900	EUILS-313	**a_Applicability_ auto:** 007000 007400 007800 007900 008000 008200 008400 008800 310900 **a_JIRA_BL4R3:** EUILS-313
Eu.ILS.4032	Def	Internal_Msg_Flank_Protection_Status		007000 007400 007800 007900 008400 008800 310900	EUILS-313	**a_Applicability_ auto:** 007000 007400 007800 007900 008400 008800 310900 **a_JIRA_BL4R3:** EUILS-313
Eu.ILS.4033	Def	Internal_Msg_Line_Direction_Control		007000 007400 007800 007900 008000 008200 008400 008800 310900	EUILS-313	**a_Applicability_ auto:** 007000 007400 007800 007900 008000 008200 008400 008800 310900 **a_JIRA_BL4R3:** EUILS-313
Eu.ILS.4034	Def	Internal_Msg_Line_Status		007000 007400 007800 007900 008000 008200 008400 008800 310900	EUILS-313	**a_Applicability_ auto:** 007000 007400 007800 007900 008000 008200 008400 008800 310900 **a_JIRA_BL4R3:** EUILS-313
Eu.ILS.4035	Def	Internal_Msg_Opposite_Main_Signal_Status		007000 007800 007900	EUILS-313	**a_Applicability_ auto:** 007000

© EULYNX Partners

ID	Type	Requirement Part 1	Requirement Part 2	Appl.	JIRA	V 4.3 (0.A) > V 4.2 (1.A)
				008800 310900		007800 007900 008800 310900 **a_JIRA_BL4R3:** EUILS-313
Eu.ILS.4036	Def	Internal_Msg_Route_Monitoring_Status		007000 007400 007800 007900 008000 008200 008400 008800 310900	EUILS-313	**a_Applicability_auto:** 007000 007400 007800 007900 008000 008200 008400 008800 310900 **a_JIRA_BL4R3:** EUILS-313
Eu.ILS.4037	Def	Internal_Msg_Route_Pretest_Status		007000 007400		
Eu.ILS.4038	Def	Internal_Msg_Route_Release_Inhibition_Status		007400		
Eu.ILS.4039	Def	Internal_Msg_Route_Status		Default		
Eu.ILS.4040	Def	Internal_Msg_Signal_Status		007000 007400 007800 007900 008000 008200 008400 008800 310900	EUILS-313	**a_Applicability_auto:** 007000 007400 007800 007900 008000 008200 008400 008800 310900 **a_JIRA_BL4R3:** EUILS-313
Eu.ILS.4041	Def	Internal_Msg_Train_Operated_Route_Release_Status		Default		
Eu.ILS.4042	Def	Internal_Msg_TVPS_Status		Default		
Eu.ILS.4201	Def	Internal_Cd_Abort_Route_Cancellation_Request		008400		
Eu.ILS.4259	Def	Internal_Msg_TDP_Status		008400	EUILS-276	object created after baseline 4.2 (1.A)

© EULYNX Partners

ID	Type	Requirement Part 1	Requirement Part 2	Appl.	JIRA	V 4.3 (0.A) > V 4.2 (1.A)
Eu.ILS.3951	Def	[Package] SCI-ILS - Information Flows [Interface Requirements - Directions Of Exchanged Information Objects (External)] **bdd** [Package] SCI-ILS - Information Flows [Interface Requirements - Directions Of Exchanged Information Objects (External)] «information flow» **SCI_ILS** provreqd «signal» Cd_Abort_Route_Cancellation_Request provreqd «signal» Cd_Access_Restriction_Request provreqd «signal» Cd_Flank_Protection_Request provreqd «signal» Cd_Route_Cancellation_Request provreqd «signal» Cd_Route_Request provreqd «signal» Cd_Route_Release_Inhibition_Activation_Request provreqd «signal» Cd_Route_Pretest_Request provreqd «signal» Msg_Access_Restriction_Status provreqd «signal» Msg_Activation_Zone_Status provreqd «signal» Msg_Approach_Zone_Status provreqd «signal» Msg_Flank_Protection_Status provreqd «signal» Msg_Line_Direction_Control provreqd «signal» Msg_Line_Status provreqd «signal» Msg_Opposite_Main_Signal_Status provreqd «signal» Msg_Route_Monitoring_Status provreqd «signal» Msg_Route_Pretest_Status provreqd «signal» Msg_Route_Release_Inhibition_Status provreqd «signal» Msg_Route_Status provreqd «signal» Msg_Signal_Status provreqd «signal» Msg_Train_Operated_Route_Release_Status provreqd «signal» Msg_TVPS_Status provreqd «signal» Msg_TDP_Status «information flow» **SCI_ILS_AIS** **proxyPorts** «ProxyPort» P101inout : SCI_ILS «ProxyPort» P1inout : PDI_GEN_ADJ «information flow» **SCI_ILS_EIL** **proxyPorts** «ProxyPort» P101inout : SCI_ILS «ProxyPort» P1inout : PDI_GEN_ADJ «information flow» **PDI_GEN_ADJ** prov «signal» Cd_PDI_Version_Check reqd «signal» Msg_PDI_Version_Check prov «signal» Cd_Close_PDI prov «signal» Cd_Initialisation_Request reqd «signal» Msg_Start_Initialisation reqd «signal» Msg_Reset_PDI provreqd «signal» Msg_Status_Report_Completed reqd «signal» Msg_Initialisation_Completed		Default	EUILS-276	**a_JIRA_BL4R3:** EUILS-276
Eu.ILS.4194	Def	Cd_Abort_Route_Cancellation_Request	Command (Cd) from sender interlocking to receiver interlocking to request the abortion of a secondary route cancellation.	008400		
Eu.ILS.3953	Def	Cd_Access_Restriction_Request	Command (Cd) from sender interlocking to receiver interlocking to request the activation or deactivation of an access restriction to the track section.	007000 007400 007800 007900 008200 310900	EUILS-313	**a_Applicability_auto:** 007000 007400 007800 007900 008200 310900 **a_JIRA_BL4R3:** EUILS-313
Eu.ILS.3954	Def	Cd_Flank_Protection_Request	Command (Cd) from sender interlocking to receiver interlocking to request the provision or cancellation of flank protection.	007000 007400 007800 007900 008400 008800 310900	EUILS-313	**a_Applicability_auto:** 007000 007400 007800 007900 008400 008800 310900 **a_JIRA_BL4R3:** EUILS-313
Eu.ILS.3955	Def	Cd_Route_Cancellation_Request	Command (Cd) from sender interlocking to receiver interlocking to request the cancellation of a secondary route.	007000 007400 007800 007900 008000 008200 008400 008800 310900	EUILS-313	**a_Applicability_auto:** 007000 007400 007800 007900 008000 008200 008400 008800 310900 **a_JIRA_BL4R3:** EUILS-313
Eu.ILS.3956	Def	Cd_Route_Pretest_Request	Command (Cd) from sender interlocking to receiver interlocking to request the pretest of a secondary route.	007000 007400		

© EULYNX Partners

ID	Type	Requirement Part 1	Requirement Part 2	Appl.	JIRA	V 4.3 (0.A) > V 4.2 (1.A)
Eu.ILS.3957	Def	Cd_Route_Release_Inhibition_Activation_Request	Command (Cd) from sender interlocking to receiver interlocking to request the activation of the inhibited route release.	007400		
Eu.ILS.3958	Def	Cd_Route_Request	Command (Cd) from sender interlocking to receiver interlocking to request the initialisation of a secondary route.	Default		
Eu.ILS.3959	Def	Msg_Access_Restriction_Status	Message (Msg) from sender interlocking to receiver interlocking to report the status of an access restriction to the track section.	007000 007400 007800 007900 008000 008200 310900	EUILS-313	**a_Applicability_ auto:** 007000 007400 007800 007900 008000 008200 310900 **a_JIRA_BL4R3:** EUILS-313
Eu.ILS.3960	Def	Msg_Activation_Zone_Status	Message (Msg) from sender interlocking to receiver interlocking to report the status of an activation zone.	Default		
Eu.ILS.3961	Def	Msg_Approach_Zone_Status	Message (Msg) from sender interlocking to receiver interlocking to report the status of an approach zone.	007000 007400 007800 007900 008000 008200 008400 008800 310900	EUILS-313	**a_Applicability_ auto:** 007000 007400 007800 007900 008000 008200 008400 008800 310900 **a_JIRA_BL4R3:** EUILS-313
Eu.ILS.3964	Def	Msg_Flank_Protection_Status	Message (Msg) from sender interlocking to receiver interlocking to report the status of flank protection.	007000 007400 007800 007900 008400 008800 310900	EUILS-313	**a_Applicability_ auto:** 007000 007400 007800 007900 008400 008800 310900 **a_JIRA_BL4R3:** EUILS-313
Eu.ILS.3962	Def	Msg_Line_Direction_Control	Message (Msg) from sender interlocking to receiver interlocking to report the status of the current line direction, request the line direction "exit" or to hand over the line direction "exit".	007000 007400 007800 007900 008000 008200 008400 008800 310900	EUILS-313	**a_Applicability_ auto:** 007000 007400 007800 007900 008000 008200 008400 008800 310900 **a_JIRA_BL4R3:** EUILS-313
Eu.ILS.3965	Def	Msg_Line_Status	Message (Msg) from sender interlocking to receiver interlocking to report the status of the line.	007000 007400 007800 007900 008000 008200 008400 008800 310900	EUILS-313	**a_Applicability_ auto:** 007000 007400 007800 007900 008000 008200 008400 008800 310900 **a_JIRA_BL4R3:** EUILS-313
Eu.ILS.3966	Def	Msg_Opposite_Main_Signal_Status	Message (Msg) from sender interlocking to receiver interlocking to report the status of the opposite main signals. The opposite main signals are the station main	007000 007800 007900 008800 310900	EUILS-313	**a_Applicability_ auto:** 007000 007800 007900 008800

© EULYNX Partners

ID	Type	Requirement Part 1	Requirement Part 2	Appl.	JIRA	V 4.3 (0.A) > V 4.2 (1.A)
			signals which are facing to the line and the boundary indicate the stop aspect. The receiver interlocking is informed from its perspective about the opposite station main signals of the sender interlocking.			310900 **a_JIRA_BL4R3:** EUILS-313
Eu.ILS.3967	Def	Msg_Route_Monitoring_Status	Message (Msg) from sender interlocking to receiver interlocking to report the status of the route monitoring of a secondary route.	007000 007400 007800 007900 008000 008200 008400 008800 310900	EUILS-313	**a_Applicability_auto:** 007000 007400 007800 007900 008000 008200 008400 008800 310900 **a_JIRA_BL4R3:** EUILS-313
Eu.ILS.3968	Def	Msg_Route_Pretest_Status	Message (Msg) from sender interlocking to receiver interlocking to report the status of a secondary route pretest.	007000 007400		
Eu.ILS.3969	Def	Msg_Route_Release_Inhibition_Status	Message (Msg) from sender interlocking to receiver interlocking to report the status of the inhibited route release.	007400		
Eu.ILS.3970	Def	Msg_Route_Status	Message (Msg) from sender interlocking to receiver interlocking to report the status of a secondary route.	Default		
Eu.ILS.3971	Def	Msg_Signal_Status	Message (Msg) from sender interlocking to receiver interlocking to report the status of a signal.	007000 007400 007800 007900 008000 008200 008400 008800 310900	EUILS-313	**a_Applicability_auto:** 007000 007400 007800 007900 008000 008200 008400 008800 310900 **a_JIRA_BL4R3:** EUILS-313
Eu.ILS.3972	Def	Msg_Train_Operated_Route_Release_Status	Message (Msg) from sender interlocking to receiver interlocking to report the status of the train operated release of a secondary route.	Default		
Eu.ILS.3973	Def	Msg_TVPS_Status	Message (Msg) from sender interlocking to receiver interlocking to report the status of a TVPS adjacent to a boundary.	Default		
Eu.ILS.4252	Def	Msg_TDP_Status	Message (Msg) from sender interlocking to receiver interlocking to report the status of a TDP adjacent to a boundary.	008400	EUILS-276, EUILS-309	object created after baseline 4.2 (1.A)
Eu.ILS.1832	Head	**3.3 SCI-ILS - Functional Viewpoint**		Default		
Eu.ILS.151	Head	**3.3.1 SCI-ILS - Functional Context**		Default		

© EULYNX Partners

ID	Type	Requirement Part 1	Requirement Part 2	Appl.	JIRA	V 4.3 (0.A) > V 4.2 (1.A)
Eu.ILS.150	Info	[Package] SCI-ILS - Functional Context [Functional Viewpoint - Interface Definition - Initialisation] 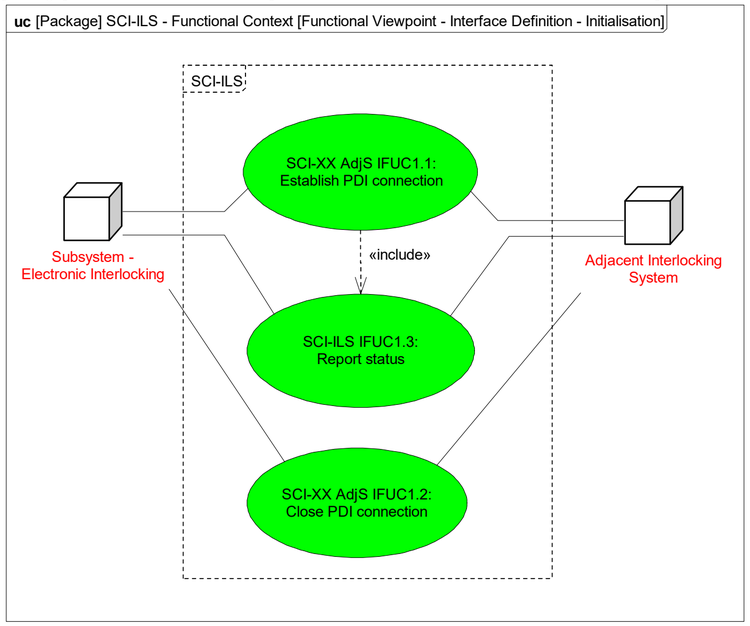 		Default		
Eu.ILS.3887	Info	The generic UseCases SCI-XX AdjS IFUC1.1: Establish PDI connection and SCI-XX AdjS IFUC1.2: Close PDI connection are specified in [Eu.Doc.119].		Default		
Eu.ILS.116	Info	SCI-ILS IFUC1.3: Report status	The Interface-UseCase "SCI-ILS IFUC1.3: Report status" defines the report of the status information which is done for each boundary.	Default		
Eu.ILS.3833	Info	[Interaction] SCI-ILS IFUC1.3 - Alternative Scenario [SCI-ILS IF SD 1.3.1] 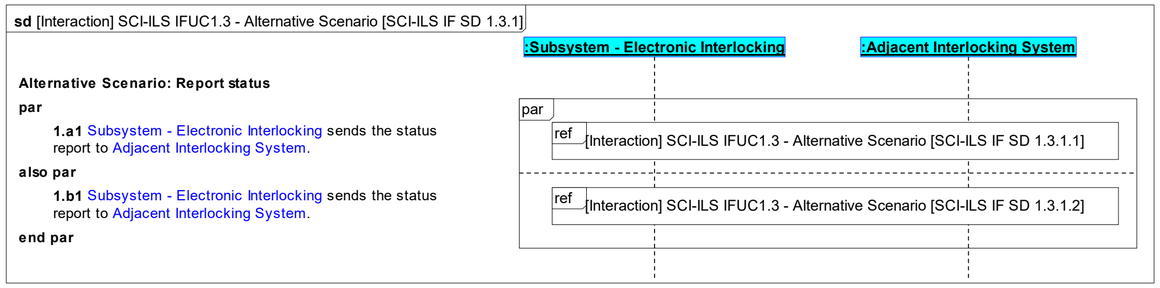 	[Interaction] SCI-ILS IFUC1.3 - Alternative Scenario [SCI-ILS IF SD 1.3.1] shows a possible variant of a status report. Which messages are actually sent is dependent from the national requirements and the used or configured functionality in the interlockings. This SD is part of [SCI-XX AdjS IF SD 1.1.1] in [Eu.Doc.119].	Default	EUILS-305	**art_Description:** [Interaction] SCI-ILS IFUC1.3 - Alternative Scenario [SCI-ILS IF SD 1.3.1] shows a possible variant of a status report. Which messages are actually sent is dependent from the national requirements and the used or configured functionality in the interlockings. This SD is part of [SCI-XX AdjS IF SD 1.1.1] in [Eu.Doc.119]. **a_JIRA_BL4R3:** EUILS-305

ID	Type	Requirement Part 1	Requirement Part 2	Appl.	JIRA	V 4.3 (0.A) > V 4.2 (1.A)
Eu.ILS.1807	Info	[Interaction] SCI-ILS IFUC1.3 - Alternative Scenario [SCI-ILS IF SD 1.3.1.1]	[Interaction] SCI-ILS IFUC1.3 - Alternative Scenario [SCI-ILS IF SD 1.3.1.1] shows a possible variant of a status report. Which messages are actually sent is dependent from the national requirements and the used or configured functionality in the interlockings. This SD is part of [SCI-ILS IF SD 1.3.1].	Default		

sd [Interaction] SCI-ILS IFUC1.3 - Alternative Scenario [SCI-ILS IF SD 1.3.1.1]

Alternative Scenario: Report status

par

1.a1 Subsystem - Electronic Interlocking provides the current last known direction.

1.a2 Subsystem - Electronic Interlocking reports the last known direction.

1.a3 Adjacent Interlocking System received the current direction of Subsystem - Electronic Interlocking.

also par

1.b1 Subsystem - Electronic Interlocking provides the current status of the TVPS.

1.b2 Subsystem - Electronic Interlocking reports the status of the TVPS

1.b3 Adjacent Interlocking System received the current TVPS status of Subsystem - Electronic Interlocking.

also par

1.c1 Subsystem - Electronic Interlocking provides the current status of the approach zone.

1.c2 Subsystem - Electronic Interlocking reports the status of the approach zone.

1.c3 Adjacent Interlocking System received the current approach zone status of Subsystem - Electronic Interlocking.

also par

1.d1 Subsystem - Electronic Interlocking provides the current status of the activation zone.

1.d2 Subsystem - Electronic Interlocking reports the status of the activation zone.

1.d3 Adjacent Interlocking System received the current activation zone status of Subsystem - Electronic Interlocking.

also par

1.e1 Subsystem - Electronic Interlocking provides the current status of the line.

1.e2 Subsystem - Electronic Interlocking reports the status of the line.

1.e3 Adjacent Interlocking System received the current status of the line of Subsystem - Electronic Interlocking.

also par

1.f1 Subsystem - Electronic Interlocking provides the current status of the secondary route.

1.f2 Subsystem - Electronic Interlocking reports the status of the secondary route.

1.f3 Adjacent Interlocking System received the current status of the secondary route of Subsystem - Electronic Interlocking.

also par

1.g1 Subsystem - Electronic Interlocking provides the current status of the secondary route monitoring.

1.g2 Subsystem - Electronic Interlocking reports the status of the secondary route monitoring.

1.g3 Adjacent Interlocking System received the current status of the secondary route monitoring of Subsystem - Electronic Interlocking.

end par

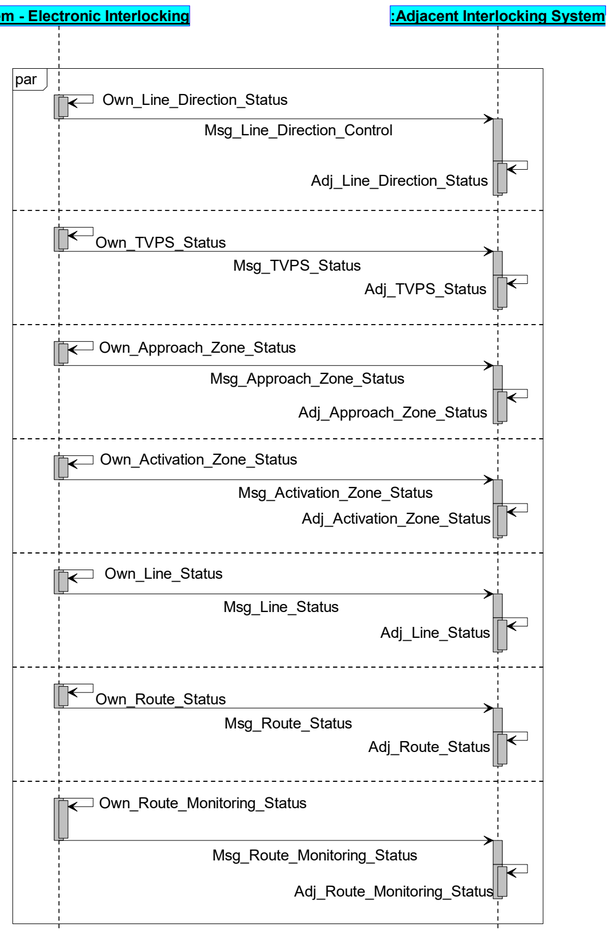

© EULYNX Partners

ID	Type	Requirement Part 1	Requirement Part 2	Appl.	JIRA	V 4.3 (0.A) > V 4.2 (1.A)
Eu.ILS.1827	Info	[Interaction] SCI-ILS IFUC1.3 - Alternative Scenario [SCI-ILS IF SD 1.3.1.2] **sd** [Interaction] SCI-ILS IFUC1.3 - Alternative Scenario [SCI-ILS IF SD 1.3.1.2] **Alternative Scenario: Report status** **par** **1.a1** Subsystem - Electronic Interlocking provides the current status of the access restriction to the track section. **1.a2** Subsystem - Electronic Interlocking reports the current status of the access restriction to the track section. **1.a3** Adjacent Interlocking System received the current access restriction status of Subsystem - Electronic Interlocking. **also par** **1.b1** Subsystem - Electronic Interlocking provides the current status of the flank protection. **1.b2** Subsystem - Electronic Interlocking reports the current status of flank protection. **1.b3** Adjacent Interlocking System received the current flank protection status of Subsystem - Electronic Interlocking. **also par** **1.c1** Subsystem - Electronic Interlocking provides the current status of the opposite station main signals. **1.c2** Subsystem - Electronic Interlocking reports the current status of the opposite station main signals. **1.c3** Adjacent Interlocking System received the current opposite main signal status of Subsystem - Electronic Interlocking. **also par** **1.d1** Subsystem - Electronic Interlocking provides the current status of the signal. **1.d2** Subsystem - Electronic Interlocking reports the status of the signal. **1.d3** Adjacent Interlocking System received the current status of the signal in advance of the boundary of Subsystem - Electronic Interlocking. also par **1.d1** Subsystem - Electronic Interlocking provides the current status of the TDP. **1.d2** Subsystem - Electronic Interlocking reports the status of the TDP. **1.d3** Adjacent Interlocking System received the current status of the TDP in advance of the boundary of Subsystem - Electronic Interlocking. **end par** 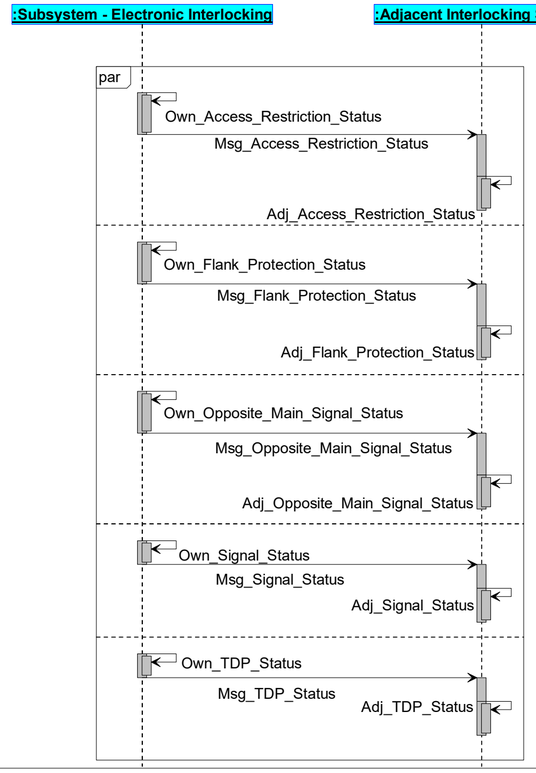 	[Interaction] SCI-ILS IFUC1.3 - Alternative Scenario [SCI-ILS IF SD 1.3.1.2] shows a possible variant of a status report. Which messages are actually sent is dependent from the national requirements and the used or configured functionality in the interlockings. This SD is part of [SCI-ILS IF SD 1.3.1].	Default	EUILS-276	**a_JIRA_BL4R3:** EUILS-276
Eu.ILS.3834	Info	[Interaction] SCI-ILS IFUC1.3 - Alternative Scenario [SCI-ILS IF SD 1.3.2] **sd** [Interaction] SCI-ILS IFUC1.3 - Alternative Scenario [SCI-ILS IF SD 1.3.2] **Alternative Scenario: Report status** **par** **1.a1** Subsystem - Electronic Interlocking receives the status report from Adjacent Interlocking System. **also par** **1.b1** Subsystem - Electronic Interlocking receives the status report from Adjacent Interlocking System. **end par** 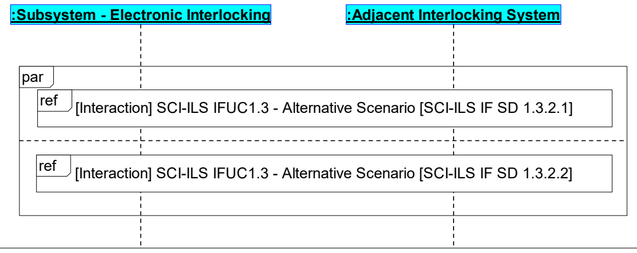 	[Interaction] SCI-ILS IFUC1.3 - Alternative Scenario [SCI-ILS IF SD 1.3.2] shows a possible variant of a status report. Which messages are actually sent is dependent from the national requirements and the used or configured functionality in the interlockings. This SD is part of [SCI-XX AdjS IF SD 1.1.1] in [Eu.Doc.119].	Default	EUILS-305	**art_Description:** [Interaction] SCI-ILS IFUC1.3 - Alternative Scenario [SCI-ILS IF SD 1.3.2] shows a possible variant of a status report. Which messages are actually sent is dependent from the national requirements and the used or configured functionality in the interlockings. This SD is part of [SCI-XX AdjS IF SD 1.1.1] in [Eu.Doc.119]. **a_JIRA_BL4R3:** EUILS-305

ID	Type	Requirement Part 1	Requirement Part 2	Appl.	JIRA	V 4.3 (0.A) > V 4.2 (1.A)
Eu.ILS.1806	Info	[Interaction] SCI-ILS IFUC1.3 - Alternative Scenario [SCI-ILS IF SD 1.3.2.1]	[Interaction] SCI-ILS IFUC1.3 - Alternative Scenario [SCI-ILS IF SD 1.3.2.1] shows a possible variant of a status report. Which messages are actually sent is dependent from the national requirements and the used or configured functionality in the interlockings. This SD is part of [SCI-ILS IF SD 1.3.2].	Default		

sd [Interaction] SCI-ILS IFUC1.3 - Alternative Scenario [SCI-ILS IF SD 1.3.2.1]

Alternative Scenario: Report status

par

1.a1 Adjacent Interlocking System provides the current last known direction.

1.a2 Adjacent Interlocking System reports the last known direction.

1.a3 Subsystem - Electronic Interlocking received the current direction of Adjacent Interlocking System.

also par

1.b1 Adjacent Interlocking System provides the current status of the TVPS.

1.b2 Adjacent Interlocking System reports the status of the TVPS.

1.b3 Subsystem - Electronic Interlocking received the current TVPS status of Adjacent Interlocking System.

also par

1.c1 Adjacent Interlocking System provides the current status of the approach zone.

1.c2 Adjacent Interlocking System reports the status of the approach zone.

1.c3 Subsystem - Electronic Interlocking received the current approach zone status of Adjacent Interlocking System.

also par

1.d1 Adjacent Interlocking System provides the current status of the activation zone.

1.d2 Adjacent Interlocking System reports the status of the activation zone.

1.d3 Subsystem - Electronic Interlocking received the current activation zone status of Adjacent Interlocking System.

also par

1.e1 Adjacent Interlocking System provides the current status of the line.

1.e2 Adjacent Interlocking System reports the status of the line.

1.e3 Subsystem - Electronic Interlocking received the current status of the line of Adjacent Interlocking System.

also par

1.f1 Adjacent Interlocking System provides the current status of the secondary route.

1.f2 Adjacent Interlocking System reports the status of the secondary route.

1.f3 Subsystem - Electronic Interlocking received the current status of the secondary route of Adjacent Interlocking System.

also par

1.g1 Adjacent Interlocking System provides the current status of the secondary route monitoring.

1.g2 Adjacent Interlocking System reports the status of the secondary route monitoring.

1.g3 Subsystem - Electronic Interlocking received the current status of the secondary route monitoring of Adjacent Interlocking System.

end par

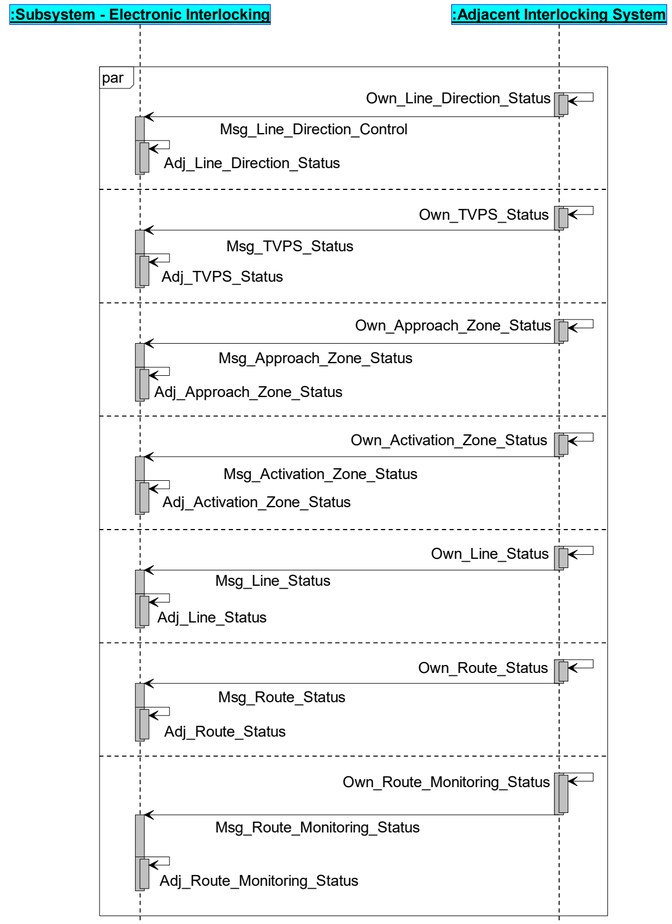

© EULYNX Partners

ID	Type	Requirement Part 1	Requirement Part 2	Appl.	JIRA	V 4.3 (0.A) > V 4.2 (1.A)
Eu.ILS.1826	Info	[Interaction] SCI-ILS IFUC1.3 - Alternative Scenario [SCI-ILS IF SD 1.3.2.2] **sd** [Interaction] SCI-ILS IFUC1.3 - Alternative Scenario [SCI-ILS IF SD 1.3.2.2] **Alternative Scenario: Report status** **par** **1.a1** Adjacent Interlocking System provides the current status of the access restriction to the track section. **1.a2** Adjacent Interlocking System reports the status of the access restriction to the track section. **1.a3** Subsystem - Electronic Interlocking received the current access restriction status of Adjacent Interlocking System. **also par** **1.b1** Adjacent Interlocking System provides the current status of the flank protection. **1.b2** Adjacent Interlocking System reports the status of the flank protection. **1.b3** Subsystem - Electronic Interlocking received the current flank protection status of Adjacent Interlocking System. **also par** **1.c1** Adjacent Interlocking System provides the current status of the opposite station main signals. **1.c2** Adjacent Interlocking System reports the status of the opposite station main signals. **1.c3** Subsystem - Electronic Interlocking received the current opposite main signal status of Adjacent Interlocking System. **also par** **1.d1** Adjacent Interlocking System provides the current status of the signal. **1.d2** Adjacent Interlocking System reports the status of the signal. **1.d3** Subsystem - Electronic Interlocking received the current status of the signal in advance of the boundary of Adjacent Interlocking System. also par **1.e1** Adjacent Interlocking System provides the current status of the TDP. **1.e2** Adjacent Interlocking System reports the status of the TDP. **1.e3** Subsystem - Electronic Interlocking received the current status of the TDP in advance of the boundary of Adjacent Interlocking System. **end par** 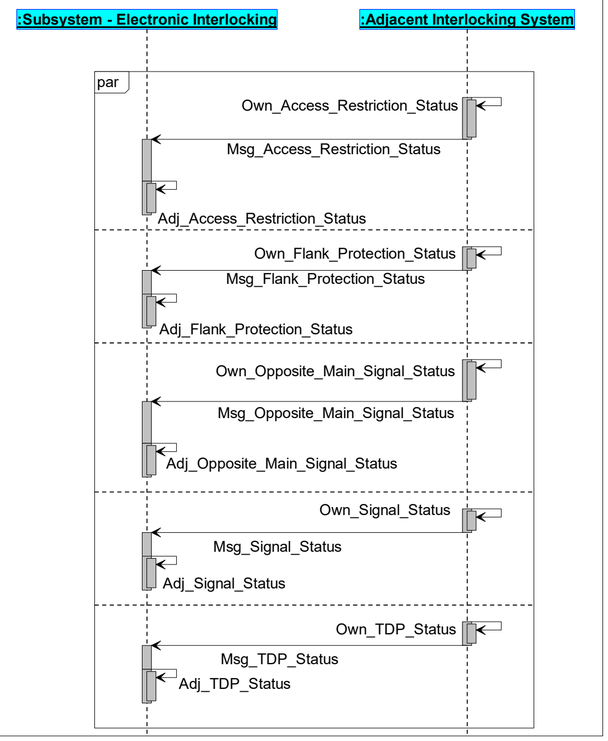 	[Interaction] SCI-ILS IFUC1.3 - Alternative Scenario [SCI-ILS IF SD 1.3.2.2] shows a possible variant of a status report. Which messages are actually sent is dependent from the national requirements and the used or configured functionality in the interlockings. This SD is part of [SCI-ILS IF SD 1.3.2].	Default	EUILS-276, EUILS-309	**a_JIRA_BL4R3:** EUILS-276, EUILS-309

ID	Type	Requirement Part 1	Requirement Part 2	Appl.	JIRA	V 4.3 (0.A) > V 4.2 (1.A)
Eu.ILS.541	Info	[Package] SCI-ILS - Functional Context [Functional Viewpoint - Interface Definition - Operation - Route] 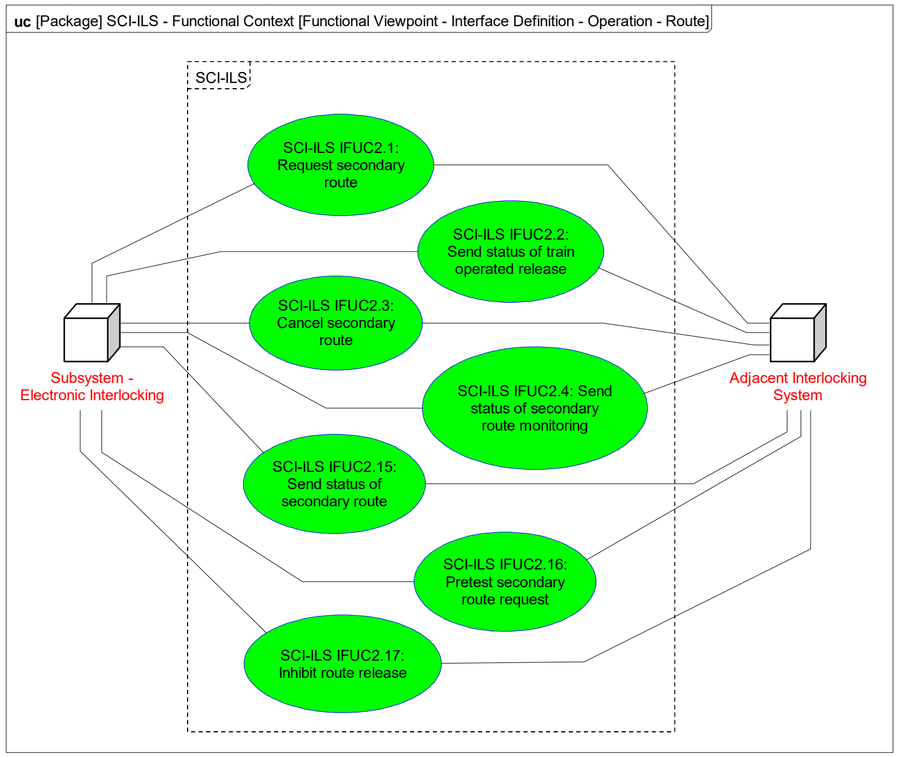 		Default		
Eu.ILS.398	Info	SCI-ILS IFUC2.1: Request secondary route	The Interface-UseCase "SCI-ILS IFUC2.1: Request secondary route" defines the request of a secondary route for a boundary.	Default		
Eu.ILS.410	Info	[Interaction] SCI-ILS IFUC2.1 - Main Success Scenario [SCI-ILS IF SD 2.1.1] 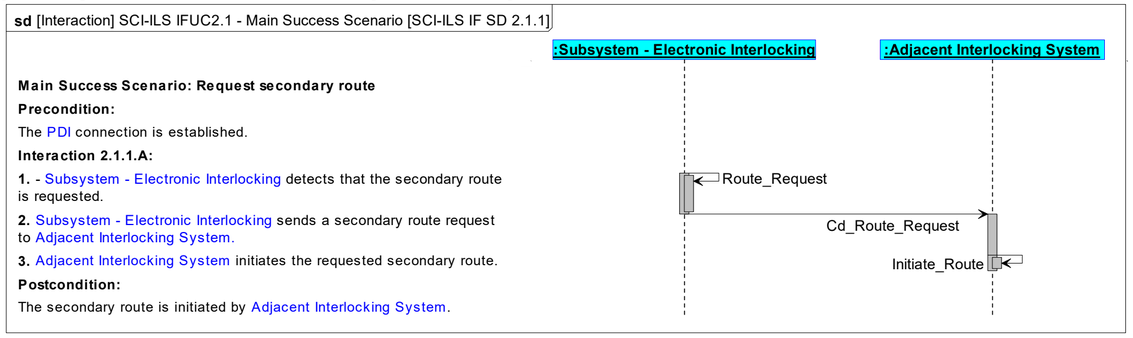 		Default		
Eu.ILS.420	Info	SCI-ILS IFUC2.2: Send status of train operated release	The Interface-UseCase "SCI-ILS IFUC2.2: Send status of train operated release" defines the report of the train operated release status for a boundary.	Default		

© EULYNX Partners

ID	Type	Requirement Part 1	Requirement Part 2	Appl.	JIRA	V 4.3 (0.A) > V 4.2 (1.A)
Eu.ILS.421	Info	[Interaction] SCI-ILS IFUC2.2 - Main Success Scenario [SCI-ILS IF SD 2.2.1] **sd** [Interaction] SCI-ILS IFUC2.2 - Main Success Scenario [SCI-ILS IF SD 2.2.1] **Main Success Scenario: Send status of train operated release** **Precondition:** The PDI connection is established. **Interaction 2.2.1.A:** **1.** - Adjacent Interlocking System detects a change of the train operated release status. **2.** Adjacent Interlocking System reports the new status of the train operated release to Subsystem - Electronic Interlocking. **3.** Subsystem - Electronic Interlocking internally responds that the train operated release status of Adjacent Interlocking System has been updated. **Postcondition:** Adjacent Interlocking System reported the new status of the train operated release to Subsystem - Electronic Interlocking. 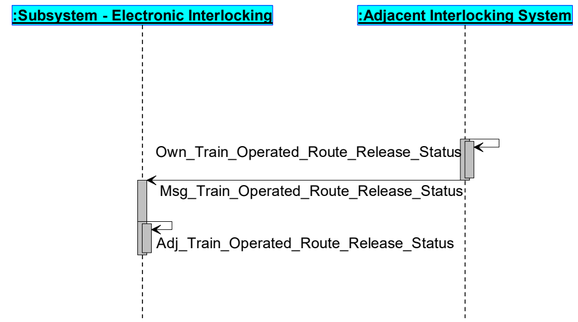 	This scenario is valid in both directions. Both interlockings send the train operated release status to each other.	Default		
Eu.ILS.438	Info	SCI-ILS IFUC2.3: Cancel secondary route	The Interface-UseCase "SCI-ILS IFUC2.3: Cancel secondary route" defines the release of a secondary route by request for a boundary.	007000 007400 007800 007900 008000 008200 008400 008800 310900	EUILS-313	**a_Applicability_ auto:** 007000 007400 007800 007900 008000 008200 008400 008800 310900 **a_JIRA_BL4R3:** EUILS-313
Eu.ILS.449	Info	[Interaction] SCI-ILS IFUC2.3 - Main Success Scenario [SCI-ILS IF SD 2.3.1] **sd** [Interaction] SCI-ILS IFUC2.3 - Main Success Scenario [SCI-ILS IF SD 2.3.1] **Main Success Scenario: Cancel secondary route** **Precondition:** The PDI connection is established. **Interaction 2.3.1.A:** **1.** - Subsystem - Electronic Interlocking detects that cancellation of the secondary route request is requested. **2.** Subsystem - Electronic Interlocking sends route cancellation request for the secondary route to Adjacent Interlocking System. **3.** Adjacent Interlocking System initiates the cancellation of the secondary route. **Postcondition:** The secondary route cancellation is initiated by Adjacent Interlocking System. 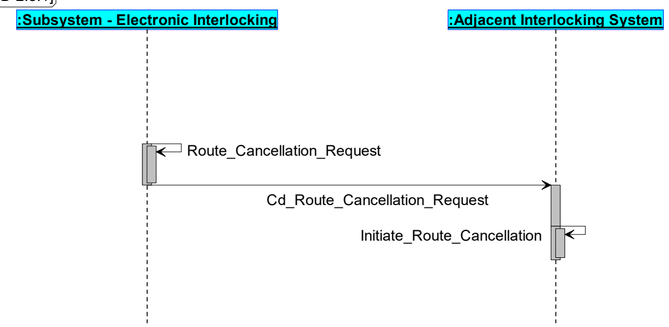 		007000 007400 007800 007900 008000 008200 008400 008800 310900	EUILS-313	**a_Applicability_ auto:** 007000 007400 007800 007900 008000 008200 008400 008800 310900 **a_JIRA_BL4R3:** EUILS-313

ID	Type	Requirement Part 1	Requirement Part 2	Appl.	JIRA	V 4.3 (0.A) > V 4.2 (1.A)
Eu.ILS.4190	Info	[Interaction] SCI-ILS IFUC2.3 - Alternative Scenario [SCI-ILS IF SD 2.3.2] **sd** [Interaction] SCI-ILS IFUC2.3 - Alternative Scenario [SCI-ILS IF SD 2.3.2] **Alternative Scenario: Abort route cancellation** **Precondition:** The PDI connection is established. **Interaction 2.3.2.A:** **1.** - Subsystem - Electronic Interlocking detects that abort cancellation of the secondary route is requested. **2.** Subsystem - Electronic Interlocking sends abort cancellation request for the secondary route to Adjacent Interlocking System. **3.** Adjacent Interlocking System initiates abort cancellation of the secondary route. **Postcondition:** The secondary route cancellation is aborted by Adjacent Interlocking System. 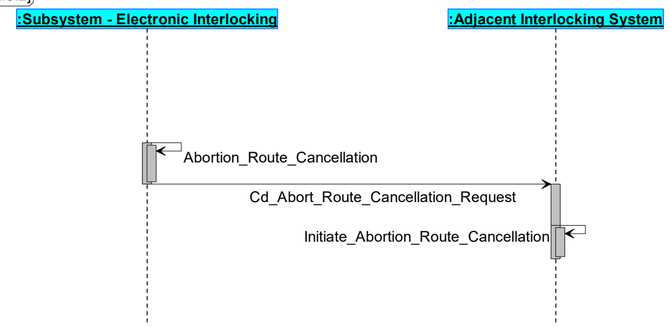 		008400		
Eu.ILS.459	Info	SCI-ILS IFUC2.4: Send status of secondary route monitoring	The Interface-UseCase "SCI-ILS IFUC2.4: Send status of secondary route monitoring" defines the report of the secondary route monitoring status for a boundary. The secondary interlocking reports the status of the secondary route monitoring each time it changes.	007000 007400 007800 007900 008000 008200 008400 008800 310900	EUILS-313	**a_Applicability_ auto:** 007000 007400 007800 007900 008000 008200 008400 008800 310900 **a_JIRA_BL4R3:** EUILS-313
Eu.ILS.460	Info	[Interaction] SCI-ILS IFUC2.4 - Main Success Scenario [SCI-ILS IF SD 2.4.1] **sd** [Interaction] SCI-ILS IFUC2.4 - Main Success Scenario [SCI-ILS IF SD 2.4.1] **Main Success Scenario: Send status of secondary route monitoring** **Precondition:** The PDI connection is established. **Interaction 2.4.1.A:** **1.** - Adjacent Interlocking System detects a change in the secondary route monitoring status. **2.** Adjacent Interlocking System reports the new status of the secondary route monitoring to Subsystem - Electronic Interlocking. **3.** Subsystem - Electronic Interlocking internally responds that the secondary route monitoring status has been updated. **Postcondition:** Adjacent Interlocking System reported the new status of the secondary route monitoring to Subsystem - Electronic Interlocking. 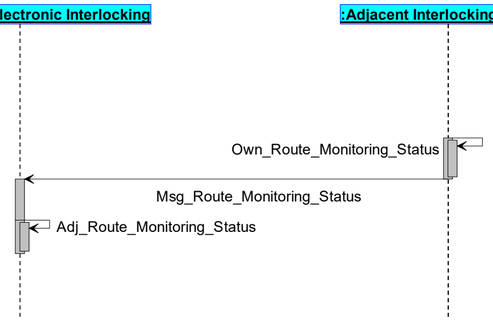 		007000 007400 007800 007900 008000 008200 008400 008800 310900	EUILS-313	**a_Applicability_ auto:** 007000 007400 007800 007900 008000 008200 008400 008800 310900 **a_JIRA_BL4R3:** EUILS-313

ID	Type	Requirement Part 1	Requirement Part 2	Appl.	JIRA	V 4.3 (0.A) > V 4.2 (1.A)
Eu.ILS.1469	Info	[Package] SCI-ILS - Functional Context [Functional Viewpoint - Interface Definition - Operation - Statuses] 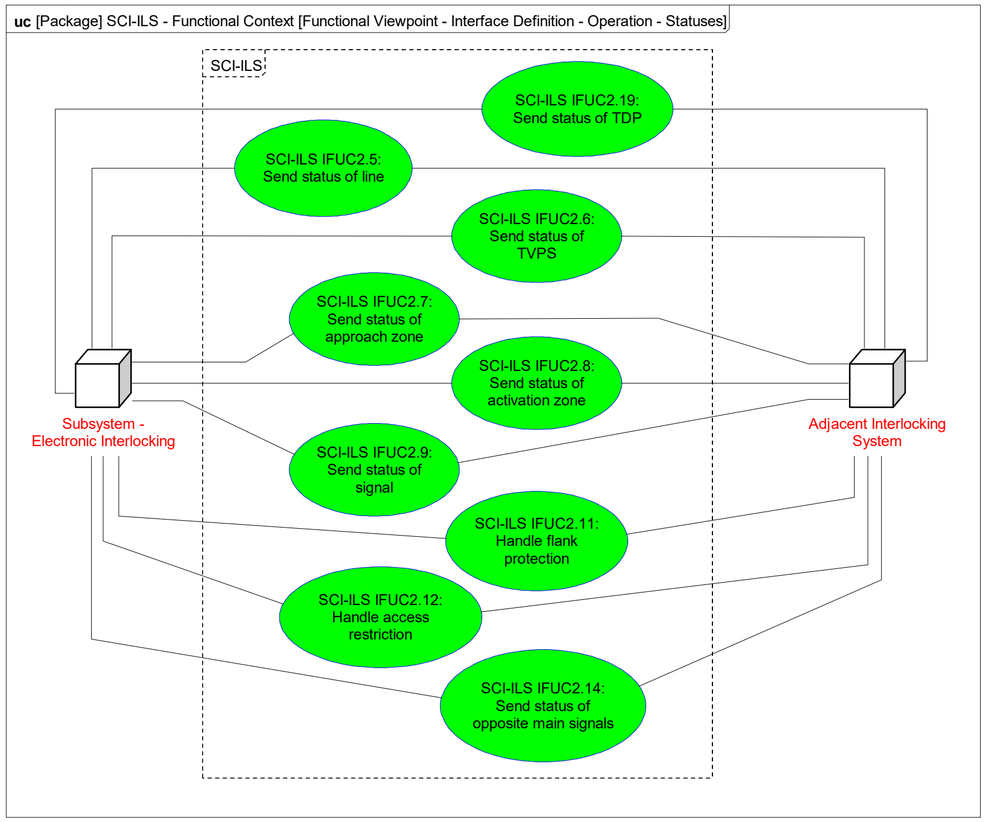 		Default	EUILS-276	**a_JIRA_BL4R3:** EUILS-276
Eu.ILS.469	Info	SCI-ILS IFUC2.5: Send status of line	The Interface-UseCase "SCI-ILS IFUC2.5: Send status of line" defines the report of the line status for a boundary. An interlocking reports the status of the line each time it changes.	007000 007400 007800 007900 008000 008200 008400 008800 310900	EUILS-313	**a_Applicability_auto:** 007000 007400 007800 007900 008000 008200 008400 008800 310900 **a_JIRA_BL4R3:** EUILS-313
Eu.ILS.489	Info	[Interaction] SCI-ILS IFUC2.5 - Main Success Scenario [SCI-ILS IF SD 2.5.1] 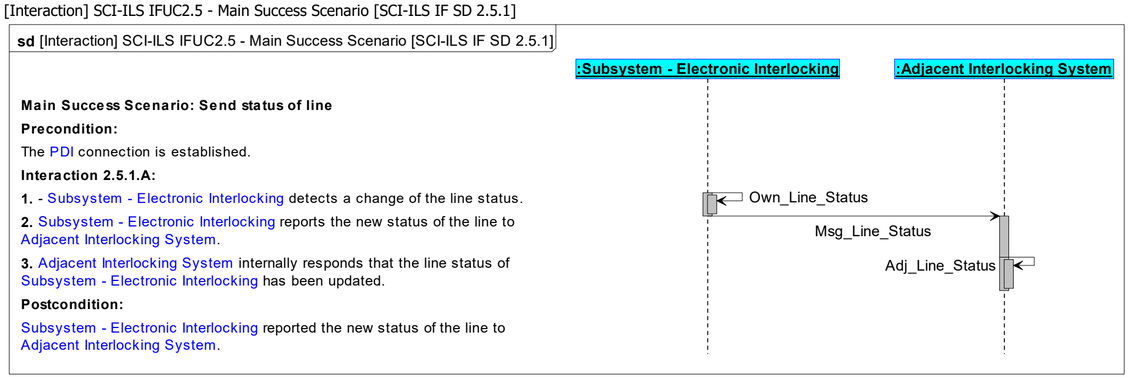 		007000 007400 007800 007900 008000 008200 008400 008800 310900	EUILS-313	**a_Applicability_auto:** 007000 007400 007800 007900 008000 008200 008400 008800 310900 **a_JIRA_BL4R3:** EUILS-313

ID	Type	Requirement Part 1	Requirement Part 2	Appl.	JIRA	V 4.3 (0.A) > V 4.2 (1.A)
Eu.ILS.501	Info	SCI-ILS IFUC2.6: Send status of TVPS	The Interface-UseCase "SCI-ILS IFUC2.6: Send status of TVPS" defines the report of the TVPS status adjacent to the boundary for one boundary. An interlocking reports the status of the TVPS adjacent to the boundary each time it changes.	Default		
Eu.ILS.502	Info	[Interaction] SCI-ILS IFUC2.6 - Main Success Scenario [SCI-ILS IF SD 2.6.1] **sd** [Interaction] SCI-ILS IFUC2.6 - Main Success Scenario [SCI-ILS IF SD 2.6.1] **Main Success Scenario: Send status of TVPS** **Precondition:** The PDI connection is established. **Interaction 2.6.1.A:** **1.** - Subsystem - Electronic Interlocking detects a change of the status of the own TVPS adjacent to the boundary. **2.** Subsystem - Electronic Interlocking reports the new status of the TVPS adjacent to the boundary to Adjacent Interlocking System. **3.** Adjacent Interlocking System internally responds that the TVPS status of Subsystem - Electronic Interlocking has been updated. **Postcondition:** Subsystem - Electronic Interlocking reported the new status of the TVPS adjacent to the boundary to Adjacent Interlocking System. 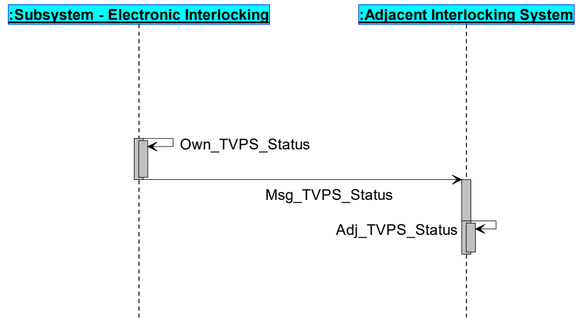 		Default		
Eu.ILS.511	Info	SCI-ILS IFUC2.7: Send status of approach zone	The Interface-UseCase "SCI-ILS IFUC2.7: Send status of approach zone" defines the report of the approach zone status for a boundary. An interlocking reports the status of an approach zone each time it changes.	007000 007400 007800 007900 008000 008200 008400 008800 310900	EUILS-313	**a_Applicability_ auto:** 007000 007400 007800 007900 008000 008200 008400 008800 310900 **a_JIRA_BL4R3:** EUILS-313
Eu.ILS.512	Info	[Interaction] SCI-ILS IFUC2.7 - Main Success Scenario [SCI-ILS IF SD 2.7.1] **sd** [Interaction] SCI-ILS IFUC2.7 - Main Success Scenario [SCI-ILS IF SD 2.7.1] **Main Success Scenario: Send status of approach zone** **Precondition:** The PDI connection is established. **Interaction 2.7.1.A:** **1.** - Subsystem - Electronic Interlocking detects a change of the status of an approach zone. **2.** Subsystem - Electronic Interlocking reports the new status of the approach zone to Adjacent Interlocking System. **3.** Adjacent Interlocking System internally responds that an approach zone status of Subsystem - Electronic Interlocking has been updated. **Postcondition:** Subsystem - Electronic Interlocking reported the new status of the approach zone to Adjacent Interlocking System. 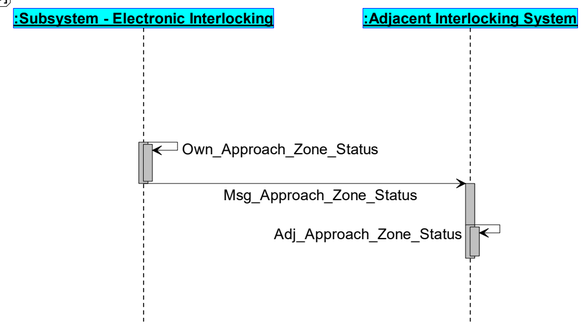 		007000 007400 007800 007900 008000 008200 008400 008800 310900	EUILS-313	**a_Applicability_ auto:** 007000 007400 007800 007900 008000 008200 008400 008800 310900 **a_JIRA_BL4R3:** EUILS-313

© EULYNX Partners

ID	Type	Requirement Part 1	Requirement Part 2	Appl.	JIRA	V 4.3 (0.A) > V 4.2 (1.A)
Eu.ILS.521	Info	SCI-ILS IFUC2.8: Send status of activation zone	The Interface-UseCase "SCI-ILS IFUC2.8: Send status of activation zone" defines the report of the activation zone status for a boundary. An interlocking reports the status of the activation zone each time it changes.	Default		
Eu.ILS.522	Info	[Interaction] SCI-ILS IFUC2.8 - Main Success Scenario [SCI-ILS IF SD 2.8.1] **sd** [Interaction] SCI-ILS IFUC2.8 - Main Success Scenario [SCI-ILS IF SD 2.8.1] **Main Success Scenario: Send status of activation zone** **Precondition:** The PDI connection is established. **Interaction 2.8.1.A:** **1.** - Subsystem - Electronic Interlocking detects the change of the status of an activation zone. **2.** Subsystem - Electronic Interlocking reports the new status of the activation zone to Adjacent Interlocking System. **3.** Adjacent Interlocking System internally responds that an activation zone status of Subsystem - Electronic Interlocking has been updated. **Postcondition:** Subsystem - Electronic Interlocking reported the new status of the activation zone to Adjacent Interlocking System. 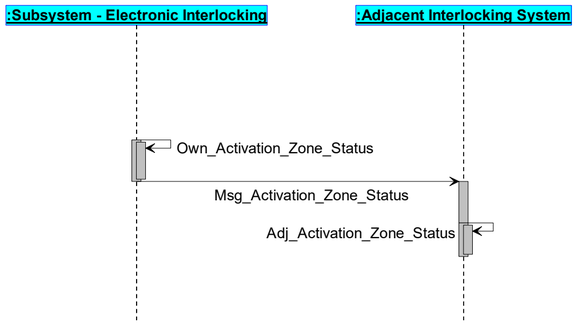 		Default		
Eu.ILS.531	Info	SCI-ILS IFUC2.9: Send status of signal	The Interface-UseCase "SCI-ILS IFUC2.9: Send status of signal" defines the report of the signal status for a boundary. An interlocking reports the status of the signal in advance of the boundary each time it changes.	007000 007400 007800 007900 008000 008200 008400 008800 310900	EUILS-313	**a_Applicability_ auto:** 007000 007400 007800 007900 008000 008200 008400 008800 310900 **a_JIRA_BL4R3:** EUILS-313
Eu.ILS.532	Info	[Interaction] SCI-ILS IFUC2.9 - Main Success Scenario [SCI-ILS IF SD 2.9.1] **sd** [Interaction] SCI-ILS IFUC2.9 - Main Success Scenario [SCI-ILS IF SD 2.9.1] **Main Success Scenario: Send status of signal** **Precondition:** The PDI connection is established. **Interaction 2.9.1.A:** **1.** - Subsystem - Electronic Interlocking detects a change of the status of the signal in advance of the boundary. **2.** Subsystem - Electronic Interlocking reports the new status of the signal in advance of the boundary to Adjacent Interlocking System. **3.** Adjacent Interlocking System internally responds that the status of the signal in advance of the boundary of Subsystem - Electronic Interlocking has been updated. **Postcondition:** Subsystem - Electronic Interlocking reported the new status of the signal in advance of the boundary to Adjacent Interlocking System. 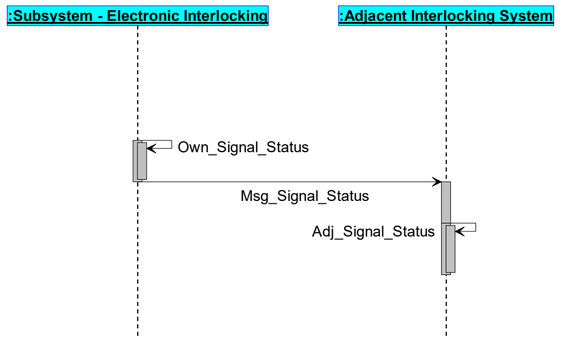 		007000 007400 007800 007900 008000 008200 008400 008800 310900	EUILS-313	**a_Applicability_ auto:** 007000 007400 007800 007900 008000 008200 008400 008800 310900 **a_JIRA_BL4R3:** EUILS-313

ID	Type	Requirement Part 1	Requirement Part 2	Appl.	JIRA	V 4.3 (0.A) > V 4.2 (1.A)
Eu.ILS.1468	Info	[Package] SCI-ILS - Functional Context [Functional Viewpoint - Interface Definition - Operation - Line Direction] **uc** [Package] SCI-ILS - Functional Context [Functional Viewpoint - Interface Definition - Operation - Line Direction] 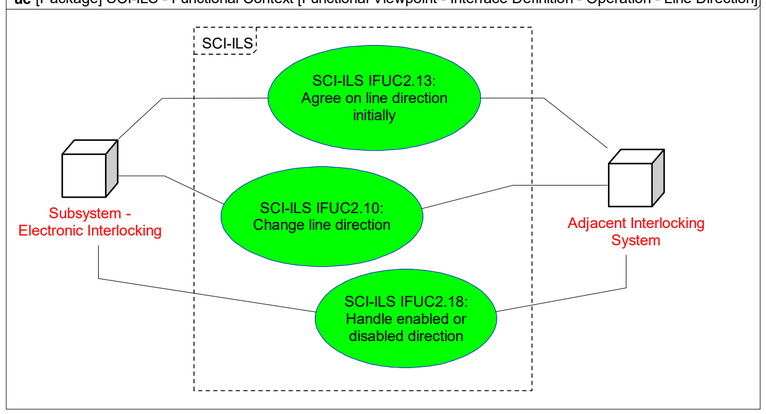 		Default		
Eu.ILS.152	Info	SCI-ILS IFUC2.10: Change line direction	The Interface-UseCase "SCI-ILS IFUC2.10: Change line direction" defines the change of the direction for a boundary. An interlocking changes its direction dependent on the direction handover or direction request (for the direction "exit") of the adjacent interlocking.	007000 007400 007800 007900 008000 008200 008400 008800 310900	EUILS-313	**a_Applicability_ auto:** 007000 007400 007800 007900 008000 008200 008400 008800 310900 **a_JIRA_BL4R3:** EUILS-313
Eu.ILS.153	Info	[Interaction] SCI-ILS IFUC2.10 - Alternative Scenario [SCI-ILS IF SD 2.10.1] **sd** [Interaction] SCI-ILS IFUC2.10 - Alternative Scenario [SCI-ILS IF SD 2.10.1] **Alternative Scenario: Handover of line direction "exit"** **Precondition:** The PDI connection is established. Subsystem - Electronic Interlocking has the line direction "exit". Adjacent Interlocking System has the line direction "entry". **Interaction 2.10.1.A:** **1.** - Subsystem - Electronic Interlocking determines that handover of line direction "exit" to the Adjacent Interlocking System is required. **2.** Subsystem - Electronic Interlocking starts changing to entry. **3.** Subsystem - Electronic Interlocking reports the handover for line direction "exit" to Adjacent Interlocking System. **4.** Adjacent Interlocking System evaluates the line direction handover request. **Interaction 2.10.1.B:** **5.** - Adjacent Interlocking System starts to changing to exit. **6.** Adjacent Interlocking System reports line direction "exit" to Subsystem - Electronic Interlocking. **7.** Subsystem - Electronic Interlocking sets line direction to "entry". **8.** Subsystem - Electronic Interlocking reports line direction "entry" to Adjacent Interlocking System. **9.** Adjacent Interlocking System sets line direction to "exit". **Postcondition:** Subsystem - Electronic Interlocking has the line direction "entry". Adjacent Interlocking System has the line direction "exit". 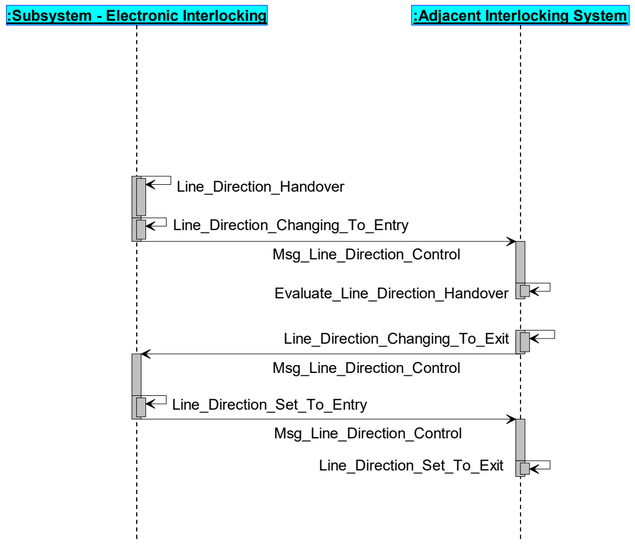 	Further explanations regarding the direction synchronisation are described in chapter 3 of [Eu.Doc.10].	007000 007400 007800 007900 008000 008200 008400 008800 310900	EUILS-313	**a_Applicability_ auto:** 007000 007400 007800 007900 008000 008200 008400 008800 310900 **a_JIRA_BL4R3:** EUILS-313

ID	Type	Requirement Part 1	Requirement Part 2	Appl.	JIRA	V 4.3 (0.A) > V 4.2 (1.A)
Eu.ILS.175	Info	[Interaction] SCI-ILS IFUC2.10 - Alternative Scenario [SCI-ILS IF SD 2.10.2] **sd** [Interaction] SCI-ILS IFUC2.10 - Alternative Scenario [SCI-ILS IF SD 2.10.2] **Alternative Scenario: Request of line direction "exit"** **Precondition:** The PDI connection is established. Subsystem - Electronic Interlocking is in line direction "exit". Adjacent Interlocking System is in line direction "entry". **Interaction 2.10.2.A:** **1.** - Adjacent Interlocking System determines that request of line direction "exit" is required. **2.** Adjacent Interlocking System reports the request for line direction "exit" to Subsystem - Electronic Interlocking. **3.** Subsystem - Electronic Interlocking evaluates the request to hand over line direction "exit". **4.** Subsystem - Electronic Interlocking and Adjacent Interlocking System perform the handover of line direction "exit". ... **Postcondition:** Subsystem - Electronic Interlocking is in line direction "entry". Adjacent Interlocking System is in line direction "exit". 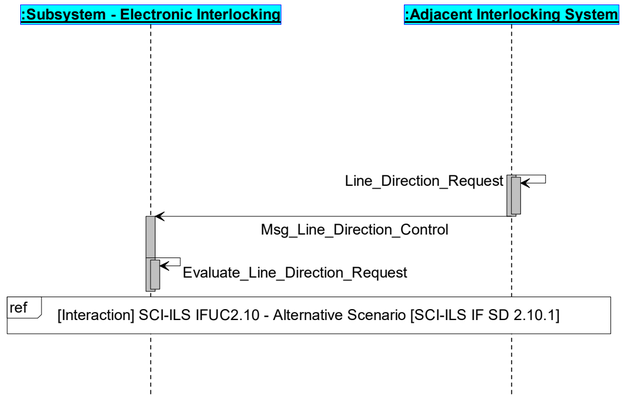 		007800 007900 008000 008400 008800	EUILS-313	**a_Applicability_ auto:** 007800 007900 008000 008400 008800 **a_JIRA_BL4R3:** EUILS-313
Eu.ILS.4167	Info	[Interaction] SCI-ILS IFUC2.10 - Alternative Scenario [SCI-ILS IF SD 2.10.3] **sd** [Interaction] SCI-ILS IFUC2.10 - Alternative Scenario [SCI-ILS IF SD 2.10.3] **Alternative Scenario: Rejection of handover for line direction "exit"** **Precondition:** The PDI connection is established. Subsystem - Electronic Interlocking has the line direction "exit". Adjacent Interlocking System has the line direction "entry". **Interaction 2.10.3.A:** **1.** - Subsystem - Electronic Interlocking determines that handover of line direction "exit" to the Adjacent Interlocking System is required. **2.** Subsystem - Electronic Interlocking starts changing to entry. **3.** Subsystem - Electronic Interlocking reports the handover for line direction "exit" to Adjacent Interlocking System. **4.** Adjacent Interlocking System evaluates the line direction handover request. **Interaction 2.10.3.B:** **5.** - Adjacent Interlocking System detects that handover of line direction "exit" is rejected. **6.** Adjacent Interlocking System reports to Subsystem - Electronic Interlocking that the handover for line direction "exit" is rejected. **7.** Subsystem - Electronic Interlocking processes the rejection of the line direction handover and keeps line direction 'exit'. **Postcondition:** -- 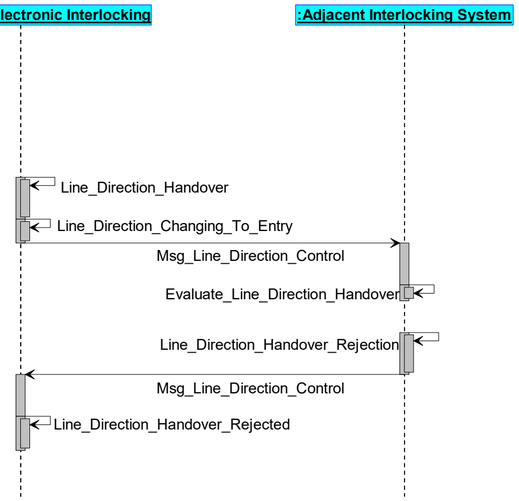 	Further explanations regarding the direction synchronisation are described in chapter 3 of [Eu.Doc.10].	008200		

ID	Type	Requirement Part 1	Requirement Part 2	Appl.	JIRA	V 4.3 (0.A) > V 4.2 (1.A)
Eu.ILS.164	Info	[Interaction] SCI-ILS IFUC2.10 - Alternative Scenario [SCI-ILS IF SD 2.10.4] **sd** [Interaction] SCI-ILS IFUC2.10 - Alternative Scenario [SCI-ILS IF SD 2.10.4] **Alternative Scenario: Rejection of request for line direction "exit"** **Precondition:** The PDI connection is established. Subsystem - Electronic Interlocking has the line direction "exit". Adjacent Interlocking System has the line direction "entry". **Interaction 2.10.4.A:** **1.** - Adjacent Interlocking System determines that request of line direction "exit" is required. **2.** Adjacent Interlocking System reports the request for line direction "exit" to Subsystem - Electronic Interlocking. **3.** Subsystem - Electronic Interlocking internally requests the handover of line direction "exit". **Interaction 2.10.4.B:** **4.** - Subsystem - Electronic Interlocking detects that handover of line direction "exit" is not possible. **5.** Adjacent Interlocking System reports to Subsystem - Electronic Interlocking that the request for line direction "exit" is rejected. **6.** Adjacent Interlocking System processes the rejection of the line direction request and keeps line direction 'entry'. **Postcondition:** ---		007000 008000		
Eu.ILS.186	Info	SCI-ILS IFUC2.11: Handle flank protection	The Interface-UseCase "SCI-ILS IFUC2.11: Handle flank protection" defines the request and cancellation of flank protection through a boundary. An interlocking gets a request from the adjacent interlocking for flank protection across the boundary or the cancellation of it. Elements which are able to provide flank protection can be points, derailers and signals.	007000 007400 007800 007900 008400 008800 310900	EUILS-313	**a_Applicability_ auto:** 007000 007400 007800 007900 008400 008800 310900 **a_JIRA_BL4R3:** EUILS-313

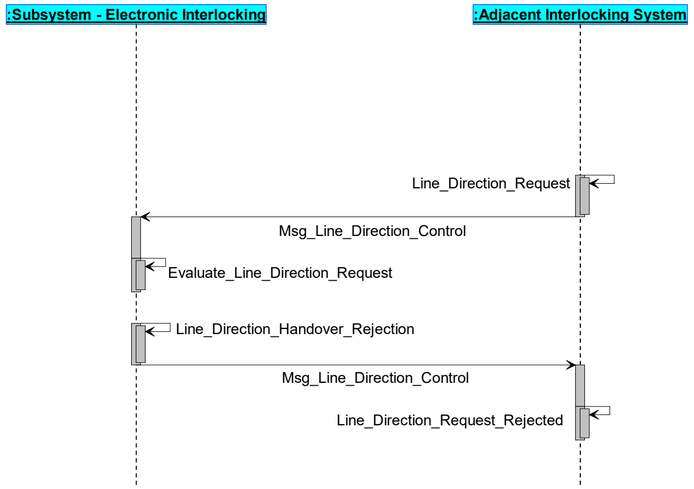

ID	Type	Requirement Part 1	Requirement Part 2	Appl.	JIRA	V 4.3 (0.A) > V 4.2 (1.A)
Eu.ILS.207	Info	[Interaction] SCI-ILS IFUC2.11 - Alternative Scenario [SCI-ILS IF SD 2.11.1] **sd** [Interaction] SCI-ILS IFUC2.11 - Alternative Scenario [SCI-ILS IF SD 2.11.1] **Alternative Scenario: Provision of flank protection** **Precondition:** The PDI connection is established. **Interaction 2.11.1.A:** **1.** - Subsystem - Electronic Interlocking detects that flank protection is requested. **2.** Subsystem - Electronic Interlocking sends a flank protection request to Adjacent Interlocking System. **3.** Adjacent Interlocking System initiates the flank protection search. **Interaction 2.11.1.B:** **4.** - Adjacent Interlocking System detects that the requested flank protection is provided. **5.** Adjacent Interlocking System reports to Subsystem - Electronic Interlocking that flank protection is provided if the flank protection request is still valid. **6.** Subsystem - Electronic Interlocking internally responds that the flank protection status of Adjacent Interlocking System has been updated and flank protection is provided. **Postcondition:** Adjacent Interlocking System reported to Subsystem - Electronic Interlocking that flank protection is provided. 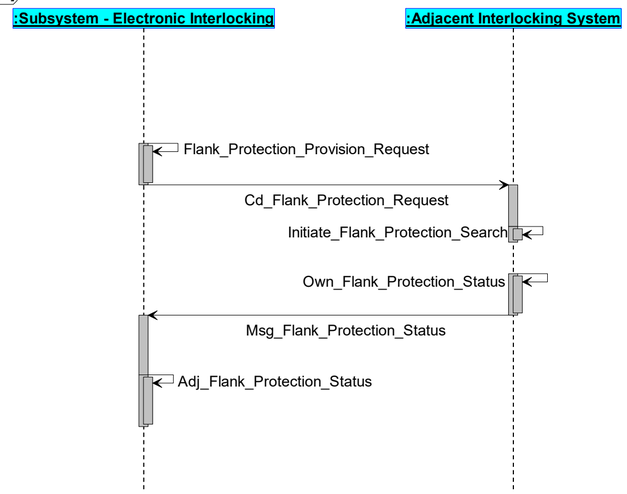 		007000 007400 007800 007900 008400 008800 310900	EUILS-313	**a_Applicability_ auto:** 007000 007400 007800 007900 008400 008800 310900 **a_JIRA_BL4R3:** EUILS-313
Eu.ILS.187	Info	[Interaction] SCI-ILS IFUC2.11 - Alternative Scenario [SCI-ILS IF SD 2.11.2] **sd** [Interaction] SCI-ILS IFUC2.11 - Alternative Scenario [SCI-ILS IF SD 2.11.2] **Alternative Scenario: Cancellation of flank protection** **Precondition:** The PDI connection is established. **Interaction 2.11.2.A:** **1.** - Subsystem - Electronic Interlocking detects that flank protection cancellation is requested. **2.** Subsystem - Electronic Interlocking sends a flank protection cancellation request Adjacent Interlocking System. **3.** Adjacent Interlocking System initiates the cancellation of the flank protection. **Interaction 2.11.2.B:** **4.** - Adjacent Interlocking System detects that the flank protection is no longer provided. **5.** Adjacent Interlocking System reports to Subsystem - Electronic Interlocking that flank protection is no longer provided. **6.** Subsystem - Electronic Interlocking internally responds that the flank protection status of Adjacent Interlocking System has been updated and flank protection is no longer provided. **Postcondition:** Adjacent Interlocking System reported to Subsystem - Electronic Interlocking that flank protection is no longer provided. 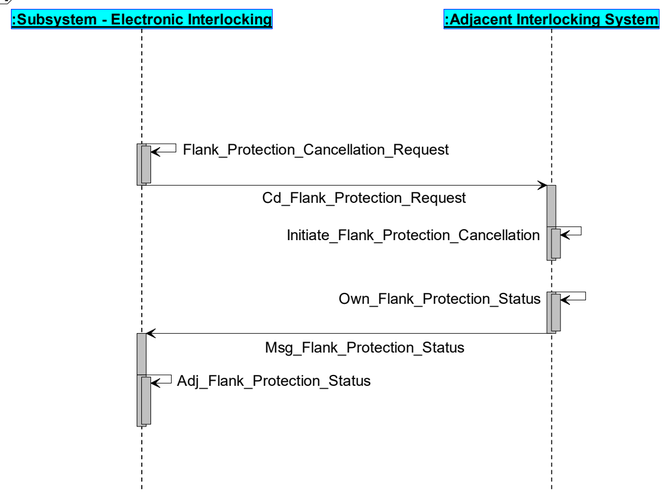 		007000 007400 007800 007900 008400 008800 310900	EUILS-313	**a_Applicability_ auto:** 007000 007400 007800 007900 008400 008800 310900 **a_JIRA_BL4R3:** EUILS-313

© EULYNX Partners

ID	Type	Requirement Part 1	Requirement Part 2	Appl.	JIRA	V 4.3 (0.A) > V 4.2 (1.A)
Eu.ILS.197	Info	[Interaction] SCI-ILS IFUC2.11 - Alternative Scenario [SCI-ILS IF SD 2.11.3] **sd** [Interaction] SCI-ILS IFUC2.11 - Alternative Scenario [SCI-ILS IF SD 2.11.3] **Alternative Scenario: Flank protection is disturbed** **Precondition:** The PDI connection is established. **Interaction 2.11.3.A:** **1.** - Adjacent Interlocking System detects that the provided and monitored flank protection is disturbed. **2.** Adjacent Interlocking System reports to Subsystem - Electronic Interlocking that flank protection is no longer provided. **3.** Subsystem - Electronic Interlocking internally responds that the flank protection status of Adjacent Interlocking System has been updated and flank protection is no longer provided. **Postcondition:** Adjacent Interlocking System reported to Subsystem - Electronic Interlocking that protection is no longer provided. 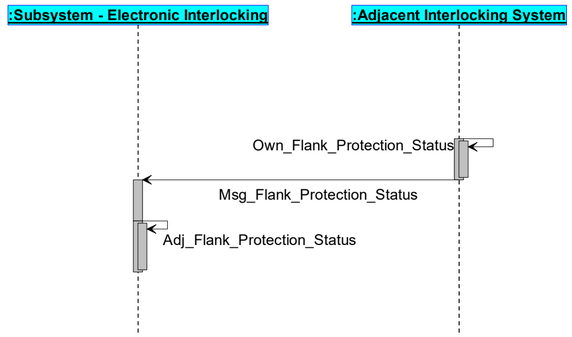 		007000 007400 007800 007900 008400 008800 310900	EUILS-313	**a_Applicability_ auto:** 007000 007400 007800 007900 008400 008800 310900 **a_JIRA_BL4R3:** EUILS-313
Eu.ILS.219	Info	SCI-ILS IFUC2.12: Handle access restriction	The Interface-UseCase "SCI-ILS IFUC2.12: Handle access restriction" defines the activation and deactivation of an access restriction to the track section for a boundary. An interlocking gets a request from the adjacent interlocking for the activation or deactivation of a access restriction to the track section.	007000 007400 007800 007900 008000 008200 310900	EUILS-313	**a_Applicability_ auto:** 007000 007400 007800 007900 008000 008200 310900 **a_JIRA_BL4R3:** EUILS-313
Eu.ILS.230	Info	[Interaction] SCI-ILS IFUC2.12 - Alternative Scenario [SCI-ILS IF SD 2.12.1] **sd** [Interaction] SCI-ILS IFUC2.12 - Alternative Scenario [SCI-ILS IF SD 2.12.1] **Alternative Scenario: Activate access restriction to the track section** **Precondition:** The PDI connection is established. **Interaction 2.12.1.A:** **1.** - Subsystem - Electronic Interlocking detects that the activation of the access restriction to the track section is requested. **2.** Subsystem - Electronic Interlocking sends a access restriction activation request to Adjacent Interlocking System. **3.** Adjacent Interlocking System activates the access restriction to the track section. **Interaction 2.12.1.B:** **4.** - Adjacent Interlocking System detects that the access restriction to the track section is activated. **5.** Adjacent Interlocking System reports to Subsystem - Electronic Interlocking that the access restriction to the track section is activated. **6.** Subsystem - Electronic Interlocking internally responds that the access restriction status of Adjacent Interlocking System has been updated and the access restriction is activated. **Postcondition:** Adjacent Interlocking System reported the new status of the activated access restriction to Subsystem - Electronic Interlocking. 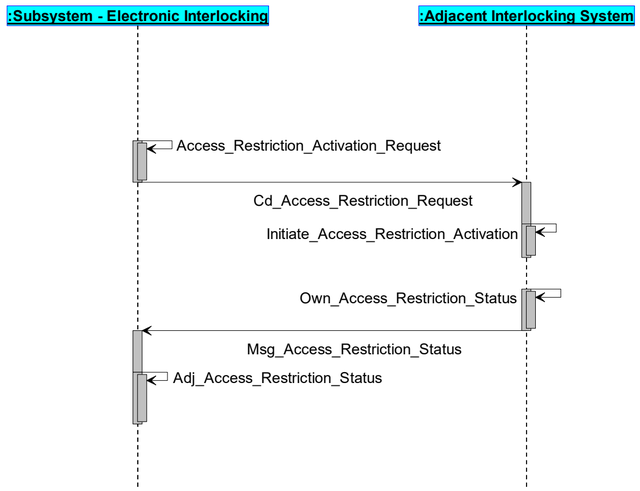 		007000 007400 007800 007900 008200 310900	EUILS-313	**a_Applicability_ auto:** 007000 007400 007800 007900 008200 310900 **a_JIRA_BL4R3:** EUILS-313

© EULYNX Partners

ID	Type	Requirement Part 1	Requirement Part 2	Appl.	JIRA	V 4.3 (0.A) > V 4.2 (1.A)
Eu.ILS.220	Info	[Interaction] SCI-ILS IFUC2.12 - Alternative Scenario [SCI-ILS IF SD 2.12.2] **sd** [Interaction] SCI-ILS IFUC2.12 - Alternative Scenario [SCI-ILS IF SD 2.12.2] **Alternative Scenario: Deactivate access restriction to the track section** **Precondition:** The PDI connection is established. **Interaction 2.12.2.A:** **1.** - Subsystem - Electronic Interlocking detects that the deactivation of the access restriction to the track section is requested. **2.** Subsystem - Electronic Interlocking sends a access restriction deactivation request to Adjacent Interlocking System. **3.** Adjacent Interlocking System deactivates the access restriction to the track section. **Interaction 2.12.2.B:** **4.** - Adjacent Interlocking System detects that the access restriction to the track section is deactivated. **5.** Adjacent Interlocking System reports to Subsystem - Electronic Interlocking that the access restriction to the track section is deactivated. **6.** Subsystem - Electronic Interlocking internally responds that the access restriction status of Adjacent Interlocking System has been updated and the access restriction is deactivated. **Postcondition:** Adjacent Interlocking System reported the new status of the deactivated access restriction to Subsystem - Electronic Interlocking. 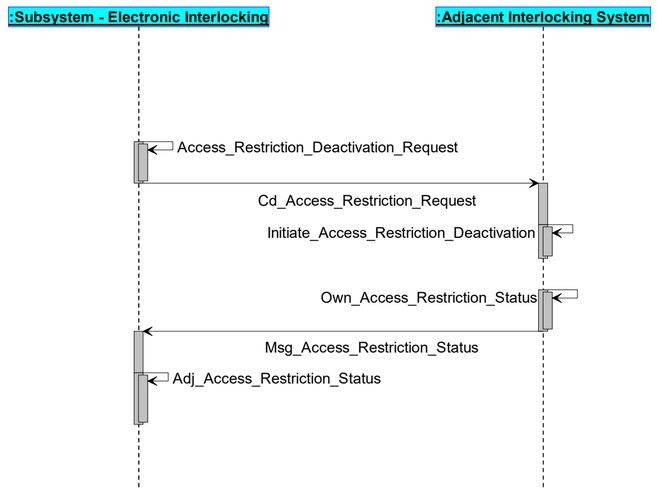 		007000 007400 007800 007900 008200 310900	EUILS-313	**a_Applicability_auto:** 007000 007400 007800 007900 008200 310900 **a_JIRA_BL4R3:** EUILS-313
Eu.ILS.4007	Info	[Interaction] SCI-ILS IFUC2.12 - Alternative Scenario [SCI-ILS IF SD 2.12.3] **sd** [Interaction] SCI-ILS IFUC2.12 - Alternative Scenario [SCI-ILS IF SD 2.12.3] **Alternative Scenario: Send status of access restriction** **Precondition:** The PDI connection is established. **Interaction 2.12.3.A:** **1.** - Adjacent Interlocking System detects a change of the status of the access restriction. **2.** Adjacent Interlocking System reports the new status of the access restriction to Subsystem - Electronic Interlocking. **3.** Subsystem - Electronic Interlocking internally responds that the status of the access restriction of Adjacent Interlocking System has been updated. **Postcondition:** Adjacent Interlocking System reported the new status of the access restriction to Subsystem - Electronic Interlocking. 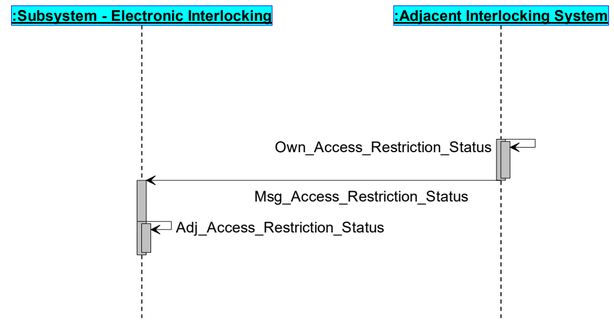 		008000		
Eu.ILS.240	Info	SCI-ILS IFUC2.13: Agree on line direction initially	The Interface-UseCase "SCI-ILS IFUC2.13: Agree on line direction initially" defines the initial agreement on a direction for a boundary. An interlocking agrees with the adjacent interlocking on the direction for each boundary.	007000 007400 007800 007900 008000 008200 008400 008800 310900	EUILS-313	**a_Applicability_auto:** 007000 007400 007800 007900 008000 008200 008400 008800 310900 **a_JIRA_BL4R3:** EUILS-313

ID	Type	Requirement Part 1	Requirement Part 2	Appl.	JIRA	V 4.3 (0.A) > V 4.2 (1.A)
Eu.ILS.388	Info	[Interaction] SCI-ILS IFUC2.13 - Alternative Scenario [SCI-ILS IF SD 2.13.1] **sd** [Interaction] SCI-ILS IFUC2.13 - Alternative Scenario [SCI-ILS IF SD 2.13.1] **Alternative Scenario: "exit", "entry"** **Precondition:** The PDI connection is established. The own last known direction of Subsystem - Electronic Interlocking is "exit". The own last known direction of Adjacent Interlocking System is "entry". **par** **Interaction 2.13.1.A:** **1.a1** - Subsystem - Electronic Interlocking evaluates that Adjacent Interlocking System has sent the direction "entry" at initialisation. **1.a2** Subsystem - Electronic Interlocking synchronises in the direction "exit". **also par** **Interaction 2.13.1.B:** **1.b1** - Adjacent Interlocking System evaluates that Subsystem - Electronic Interlocking has sent the direction "exit" at initialisation. **1.a2** Adjacent Interlocking System synchronises in the direction "entry". **end par** **Postcondition:** Subsystem - Electronic Interlocking is synchronised in direction "exit". Adjacent Interlocking System is synchronised in direction "entry". 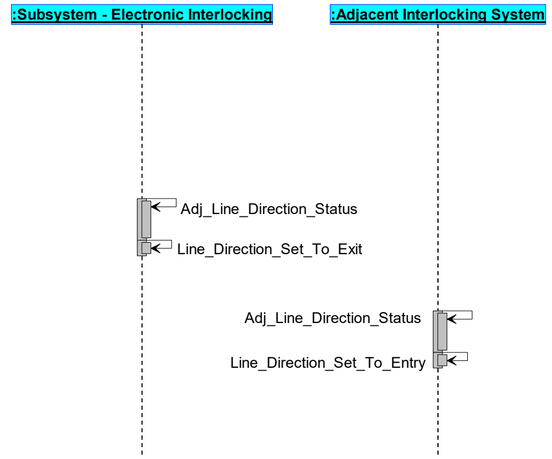 		007000 007400 007800 007900 008000 008200 008400 008800 310900	EUILS-313	**a_Applicability_auto:** 007000 007400 007800 007900 008000 008200 008400 008800 310900 **a_JIRA_BL4R3:** EUILS-313
Eu.ILS.241	Info	[Interaction] SCI-ILS IFUC2.13 - Alternative Scenario [SCI-ILS IF SD 2.13.2] **sd** [Interaction] SCI-ILS IFUC2.13 - Alternative Scenario [SCI-ILS IF SD 2.13.2] **Alternative Scenario: "entry", "entry"** **Precondition:** The PDI connection is established. The own last known direction of Subsystem - Electronic Interlocking is "entry". The own last known direction of Adjacent Interlocking System is "entry". **par** **Interaction 2.13.2.A:** **1.a1** - Subsystem - Electronic Interlocking evaluates that Adjacent Interlocking System has sent the direction "entry" at initialisation. **1.a2** Subsystem - Electronic Interlocking has the same direction as Adjacent Interlocking System. **also par** **Interaction 2.13.2.B:** **1.b1** - Adjacent Interlocking System evaluates that Subsystem - Electronic Interlocking has sent the direction "entry" at initialisation. **1.a2** Adjacent Interlocking System has the same direction as Subsystem - Electronic Interlocking. **end par** **Interaction 2.13.2.C:** **2.** - Subsystem - Electronic Interlocking detects that direction reset is initiated. **3.** Subsystem - Electronic Interlocking starts changing to direction "exit". **Interaction 2.13.2.D:** **4.** - Subsystem - Electronic Interlocking detects that its direction changed to "exit". **5.** Subsystem - Electronic Interlocking reports to Adjacent Interlocking System that it is in direction "exit". **6.** Adjacent Interlocking System synchronises in the direction "entry". **Postcondition:** Subsystem - Electronic Interlocking is synchronised in direction "exit". Adjacent Interlocking System is synchronised in direction "entry". 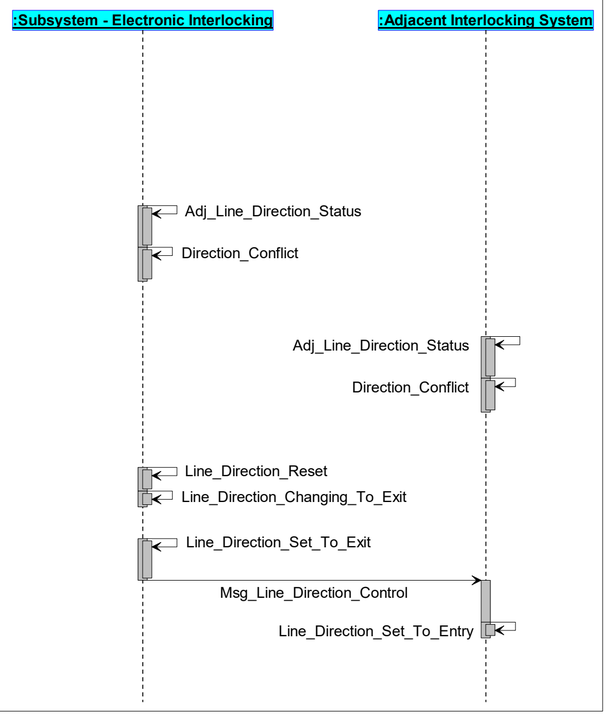 	The direction reset and the implementation of it shall be described in detail by national requirements.	007000 007400 007800 007900 008000 008200 008400 008800 310900	EUILS-313	**a_Applicability_auto:** 007000 007400 007800 007900 008000 008200 008400 008800 310900 **a_JIRA_BL4R3:** EUILS-313

ID	Type	Requirement Part 1	Requirement Part 2	Appl.	JIRA	V 4.3 (0.A) > V 4.2 (1.A)
Eu.ILS.322	Info	[Interaction] SCI-ILS IFUC2.13 - Alternative Scenario [SCI-ILS IF SD 2.13.3] **sd** [Interaction] SCI-ILS IFUC2.13 - Alternative Scenario [SCI-ILS IF SD 2.13.3] **Alternative Scenario: "no direction", "entry"** **Precondition:** The PDI connection is established. The own last known direction of Subsystem - Electronic Interlocking is "no direction". The own last known direction of Adjacent Interlocking System is "entry". **par** **Interaction 2.13.3.A:** **1.a1** - Subsystem - Electronic Interlocking evaluates that Adjacent Interlocking System has sent the direction "entry" at initialisation. **1.a2** Subsystem - Electronic Interlocking starts changing to direction "exit". **also par** **Interaction 2.13.3.B:** **1.b1** - Adjacent Interlocking System evaluates that Subsystem - Electronic Interlocking has sent "no direction" at initialisation. **1.b2** Adjacent Interlocking System is in direction "entry" and not synchronised. **end par** **Interaction 2.13.3.C:** **2.** - Subsystem - Electronic Interlocking detects that its direction changed to "exit". **3.** Subsystem - Electronic Interlocking reports to Adjacent Interlocking System that it is in direction "exit". **4.** Adjacent Interlocking System synchronises in the direction "entry". **Postcondition:** Subsystem - Electronic Interlocking is synchronised in direction "exit". Adjacent Interlocking System is synchronised in direction "entry". 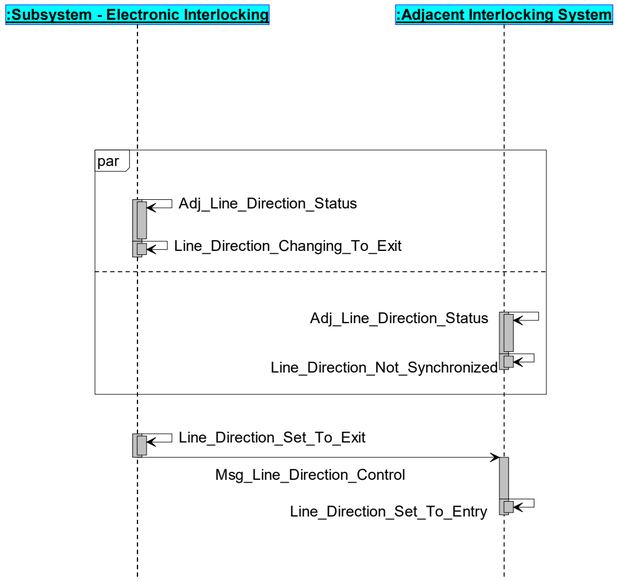 		007000 007400 007800 007900 008000 008200 008400 008800 310900	EUILS-313	**a_Applicability_ auto:** 007000 007400 007800 007900 008000 008200 008400 008800 310900 **a_JIRA_BL4R3:** EUILS-313
Eu.ILS.287	Info	[Interaction] SCI-ILS IFUC2.13 - Alternative Scenario [SCI-ILS IF SD 2.13.4] **sd** [Interaction] SCI-ILS IFUC2.13 - Alternative Scenario [SCI-ILS IF SD 2.13.4] **Alternative Scenario: "exit", "exit"** **Precondition:** The PDI connection is established. The own last known direction of Subsystem - Electronic Interlocking is "exit". The own last known direction of Adjacent Interlocking System is "exit". **par** **Interaction 2.13.4.A:** **1.a1** - Subsystem - Electronic Interlocking evaluates that Adjacent Interlocking System has sent the direction "exit" at initialisation. **1.a2** Subsystem - Electronic Interlocking has the same direction as Adjacent Interlocking System. **also par** **Interaction 2.13.4.B:** **1.b1** - Adjacent Interlocking System evaluates that Subsystem - Electronic Interlocking has sent the direction "exit" at initialisation. **1.a2** Adjacent Interlocking System has the same direction as Subsystem - Electronic Interlocking. **end par** **Interaction 2.13.4.C** **2.** - Subsystem - Electronic Interlocking detects that direction reset is initiated. **3.** Subsystem - Electronic Interlocking starts changing to direction "entry". **Interaction 2.13.4.D:** **4.** - Subsystem - Electronic Interlocking detects that its direction changed to "entry". **5.** Subsystem - Electronic Interlocking reports to Adjacent Interlocking System that it is in direction "entry". **6.** Adjacent Interlocking System synchronises in the direction "exit". **Postcondition:** Subsystem - Electronic Interlocking is synchronised in direction "entry". Adjacent Interlocking System is synchronised in direction "exit". 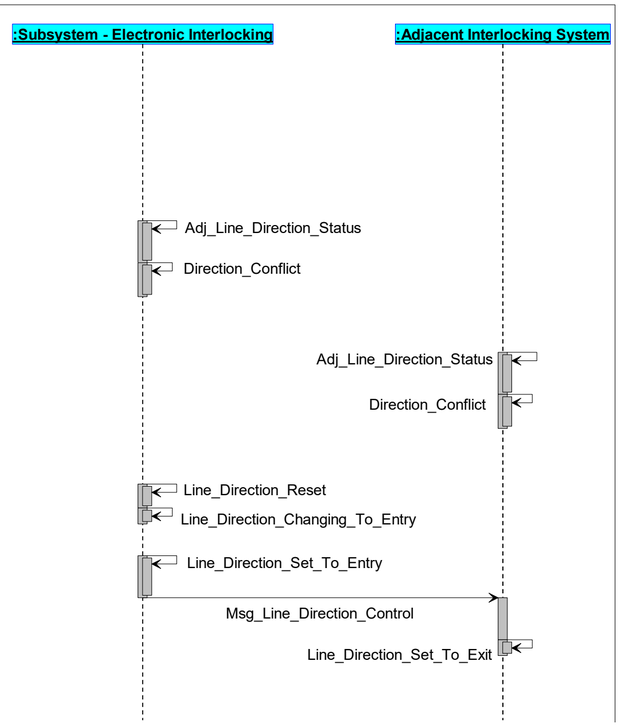 	The occurrence of direction "exit" in both interlockings is a safety-relevant situation.	007000 007400 007800 007900 008000 008200 008400 008800 310900	EUILS-313	**a_Applicability_ auto:** 007000 007400 007800 007900 008000 008200 008400 008800 310900 **a_JIRA_BL4R3:** EUILS-313

© EULYNX Partners

ID	Type	Requirement Part 1	Requirement Part 2	Appl.	JIRA	V 4.3 (0.A) > V 4.2 (1.A)
Eu.ILS.334	Info	[Interaction] SCI-ILS IFUC2.13 - Alternative Scenario [SCI-ILS IF SD 2.13.5] **sd** [Interaction] SCI-ILS IFUC2.13 - Alternative Scenario [SCI-ILS IF SD 2.13.5] **Alternative Scenario: "no direction", "exit"** **Precondition:** The PDI connection is established. The own last known direction of Subsystem - Electronic Interlocking is "no direction". The own last known direction of Adjacent Interlocking System is "exit". **par** **Interaction 2.13.5.A:** **1.a1** - Subsystem - Electronic Interlocking evaluates that Adjacent Interlocking System has sent the direction "exit" at initialisation. **1.a2** Subsystem - Electronic Interlocking starts changing to direction "entry". **also par** **Interaction 2.13.5.B:** **1.b1** - Adjacent Interlocking System evaluates that Subsystem - Electronic Interlocking has sent the direction "no direction" at initialisation. **1.b2** Adjacent Interlocking System is in direction "exit" and not synchronised. **end par** **Interaction 2.13.5.C**: **2.** - Subsystem - Electronic Interlocking detects that its direction changed to "entry". **3.** Subsystem - Electronic Interlocking reports to Adjacent Interlocking System that it is in direction "entry". **4.** Adjacent Interlocking System synchronises in the direction "exit". **Postcondition**: Subsystem - Electronic Interlocking is synchronised in direction "entry". Adjacent Interlocking System is synchronised in direction "exit". 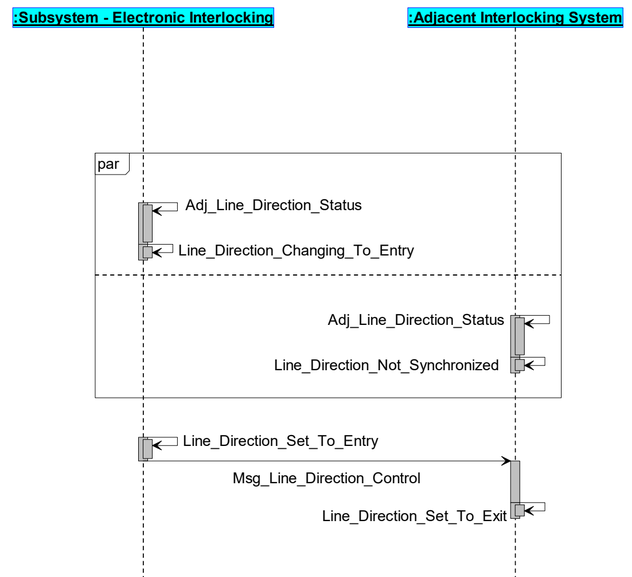 		007000 007400 007800 007900 008000 008200 008400 008800 310900	EUILS-313	**a_Applicability_ auto:** 007000 007400 007800 007900 008000 008200 008400 008800 310900 **a_JIRA_BL4R3:** EUILS-313

© EULYNX Partners

ID	Type	Requirement Part 1	Requirement Part 2	Appl.	JIRA	V 4.3 (0.A) > V 4.2 (1.A)
Eu.ILS.346	Info	[Interaction] SCI-ILS IFUC2.13 - Alternative Scenario [SCI-ILS IF SD 2.13.6] **sd** [Interaction] SCI-ILS IFUC2.13 - Alternative Scenario [SCI-ILS IF SD 2.13.6] **Alternative Scenario: "no direction", "no direction"** **Precondition:** The PDI connection is established. The own last known direction of Subsystem - Electronic Interlocking is "no direction". The own last known direction of Adjacent Interlocking System is "no direction". The own configured direction of Subsystem - Electronic Interlocking is "entry". The own configured direction of Adjacent Interlocking System is "exit". **par** **Interaction 2.13.6.A:** **1.a1** - Subsystem - Electronic Interlocking evaluates that Adjacent Interlocking System has sent "no direction" at initialisation. **1.a2** Subsystem - Electronic Interlocking is configured in direction "entry" and starts changing to direction "entry". **also par** **Interaction 2.13.6.B:** **1.b1** - Adjacent Interlocking System evaluates that Subsystem - Electronic Interlocking has sent "no direction" at initialisation. **1.b2** Adjacent Interlocking System is configured in direction "exit" and starts waiting for Subsystem - Electronic Interlocking until it reports direction "entry". **end par** **Interaction 2.13.6.C:** **2.** - Subsystem - Electronic Interlocking detects that its direction changed to "entry". **3.** Subsystem - Electronic Interlocking reports to Adjacent Interlocking System that it is in direction "entry". **4.** Adjacent Interlocking System starts changing to direction "exit". **Interaction 2.13.6.D:** **5.** - Adjacent Interlocking System detects that its direction changed to "exit". **6.** Adjacent Interlocking System reports to Subsystem - Electronic Interlocking that it is in direction "exit". **Postcondition:** Subsystem - Electronic Interlocking is synchronised in direction "entry". Adjacent Interlocking System is synchronised in direction "exit". 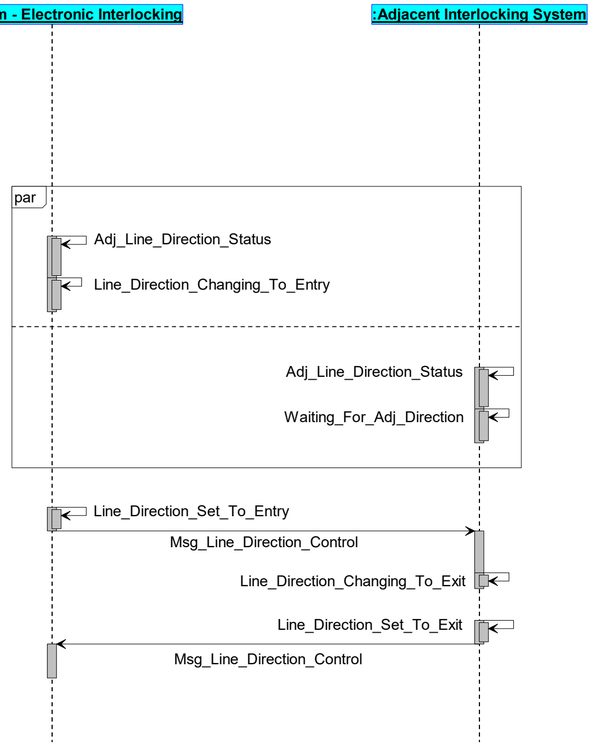 		007000 007400 007800 007900 008000 008200 008400 008800 310900	EUILS-313	**a_Applicability_ auto:** 007000 007400 007800 007900 008000 008200 008400 008800 310900 **a_JIRA_BL4R3:** EUILS-313
Eu.ILS.1531	Info	SCI-ILS IFUC2.14: Send status of opposite main signals	The Interface-UseCase "SCI-ILS IFUC2.14: Send status of opposite main signals" defines the report of the opposite station main signal status for a boundary.	007800 007900 008800 310900	EUILS-313	**a_Applicability_ auto:** 007800 007900 008800 310900 **a_JIRA_BL4R3:** EUILS-313
Eu.ILS.1532	Info	[Interaction] SCI-ILS IFUC2.14 - Main Success Scenario [SCI-ILS IF SD 2.14.1] **sd** [Interaction] SCI-ILS IFUC2.14 - Main Success Scenario [SCI-ILS IF SD 2.14.1] **Main Success Scenario: Send status of opposite main signals** **Precondition:** The PDI connection is established. **Interaction 2.14.1.A:** **1.** - Subsystem - Electronic Interlocking detects that all station main signals which are facing to the line and the boundary indicate the stop aspect. **2.** Subsystem - Electronic Interlocking reports the new status of the opposite station main signals to Adjacent Interlocking System. **3.** Adjacent Interlocking System internally responds that the opposite main signal status of Subsystem - Electronic Interlocking has been updated. **Postcondition:** Subsystem - Electronic Interlocking reported the new status of the opposite main signals to Adjacent Interlocking System. 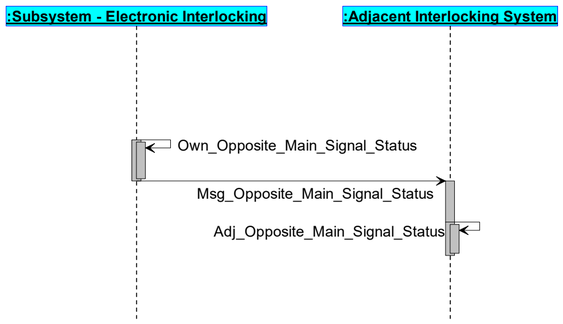 		007800 007900 008800 310900	EUILS-313	**a_Applicability_ auto:** 007800 007900 008800 310900 **a_JIRA_BL4R3:** EUILS-313

ID	Type	Requirement Part 1	Requirement Part 2	Appl.	JIRA	V 4.3 (0.A) > V 4.2 (1.A)
Eu.ILS.1808	Info	SCI-ILS IFUC2.15: Send status of secondary route	The Interface-UseCase "SCI-ILS IFUC2.15: Send status of secondary route" defines the report of the secondary route status for a boundary. The secondary interlocking reports the status of the secondary route each time it changes.	Default		
Eu.ILS.1809	Info	[Interaction] SCI-ILS IFUC2.15 - Main Success Scenario [SCI-ILS IF SD 2.15.1] **sd** [Interaction] SCI-ILS IFUC2.15 - Main Success Scenario [SCI-ILS IF SD 2.15.1] **Main Success Scenario: Send status of secondary route** **Precondition:** The PDI connection is established. **Interaction 2.15.1.A:** **1.** - Adjacent Interlocking System detects a change of the status of the secondary route. **2.** Adjacent Interlocking System reports the new status of the secondary route to Subsystem - Electronic Interlocking. **3.** Subsystem - Electronic Interlocking internally responds that the secondary route status of Adjacent Interlocking System has been updated. **Postcondition:** Adjacent Interlocking System reported the new status of the secondary route to Subsystem - Electronic Interlocking. 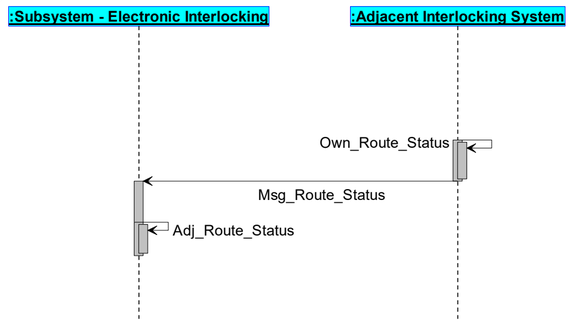 		Default		
Eu.ILS.1630	Info	SCI-ILS IFUC2.16: Pretest secondary route request	The Interface-UseCase "SCI-ILS IFUC2.16: Pretest secondary route request" defines the request and status report of a secondary route pretest.	007000 007400		
Eu.ILS.1631	Info	[Interaction] SCI-ILS IFUC2.16 - Main Success Scenario [SCI-ILS IF SD 2.16.1] **sd** [Interaction] SCI-ILS IFUC2.16 - Main Success Scenario [SCI-ILS IF SD 2.16.1] **Main Success Scenario: Pretest secondary route request** **Precondition:** The PDI connection is established. **Interaction 2.16.1.A:** **1.** - Subsystem - Electronic Interlocking detects that the pretest of the secondary route request is requested. **2.** Subsystem - Electronic Interlocking sends a pretest request for the secondary route to Adjacent Interlocking System. **3.** Adjacent Interlocking System initiates the pretest of the secondary route. **Interaction 2.16.1.B:** **4.** - Adjacent Interlocking System detects a change of the status of the secondary route pretest. **5.** Adjacent Interlocking System reports the new status of the secondary route pretest to Subsystem - Electronic Interlocking. **6.** Subsystem - Electronic Interlocking internally responds that the secondary route pretest status of Adjacent Interlocking System has been updated. **Postcondition:** Adjacent Interlocking System reported the new status of the secondary route pretest to Subsystem - Electronic Interlocking. 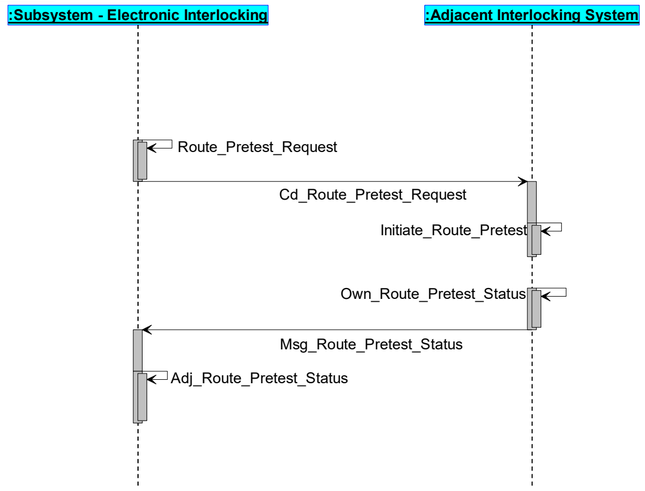 		007000 007400		
Eu.ILS.1645	Info	SCI-ILS IFUC2.17: Inhibit route release	The Interface-UseCase "SCI-ILS IFUC2.17: Inhibit route release" defines the activation and status report of the inhibited route release for a boundary.	007400		

ID	Type	Requirement Part 1	Requirement Part 2	Appl.	JIRA	V 4.3 (0.A) > V 4.2 (1.A)
Eu.ILS.1810	Info	[Interaction] SCI-ILS IFUC2.17 - Main Success Scenario [SCI-ILS IF SD 2.17.1] **sd** [Interaction] SCI-ILS IFUC2.17 - Main Success Scenario [SCI-ILS IF SD 2.17.1] **Main Success Scenario: Activate inhibited route release** **Precondition:** The PDI connection is established. **Interaction 2.17.1.A:** **1.** - Subsystem - Electronic Interlocking detects that the inhibited route release is requested. **2.** Subsystem - Electronic Interlocking sends a inhibited route release request to Adjacent Interlocking System. **3.** Adjacent Interlocking System initiates the inhibited route release. **Interaction 2.17.1.B:** **4.** - Adjacent Interlocking System detects that the inhibited route release is activated. **5.** Adjacent Interlocking System reports to Subsystem - Electronic Interlocking that the inhibited route release is activated. **6.** Subsystem - Electronic Interlocking internally responds that the inhibited route release status of Adjacent Interlocking System has been updated and the inhibited route release is activated. **Postcondition:** Adjacent Interlocking System reported the new status of the activated inhibited route release to Subsystem - Electronic Interlocking. 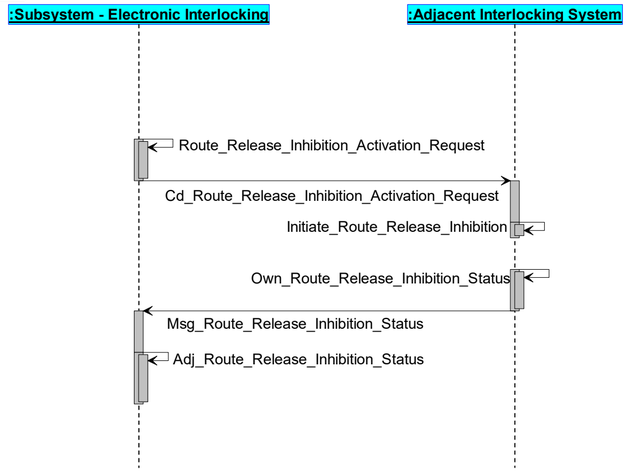 		007400		
Eu.ILS.3835	Info	SCI-ILS IFUC2.18: Handle enabled or disabled direction	The Interface-UseCase "SCI-ILS IFUC2.18: Handle enabled or disabled direction" defines the function “Enable/disable direction” (Dutch: Uitschakelen / herstellen linkerspoor) and is used for a line block with ‘manual direction control’. It is a degrade mode function. In case of a disturbance in the line block, for example a disturbance in a track circuit, the function “disable direction” is used to disable the current not regular direction, mostly the left track of a double track line. If the line block is disable no routes can be set to the line block from both sites and the activation zones of level crossings are set for both directions. A command to disable or enable the direction of one track can only requested by one interlocking.	008400 310900		

ID	Type	Requirement Part 1	Requirement Part 2	Appl.	JIRA	V 4.3 (0.A) > V 4.2 (1.A)
Eu.ILS.3836	Info	[Interaction] SCI-ILS IFUC2.18 - Alternative Scenario [SCI-ILS IF SD 2.18.1] **sd** [Interaction] SCI-ILS IFUC2.18 - Alternative Scenario [SCI-ILS IF SD 2.18.1] **Alternative Scenario: Enable direction** **Precondition:** The PDI connection is established. **Interaction 2.18.1.A:** **1.** - Subsystem - Electronic Interlocking detects that it is requested to enable the line block direction. **2.** Subsystem - Electronic Interlocking sends a message to Adjacent Interlocking System to enable the direction of the line block. **3.** Adjacent Interlocking System enables the line block direction. **Interaction 2.18.1.B:** **4.** - Adjacent Interlocking System detects that the line block direction status changed. **5.** Adjacent Interlocking System reports the line block direction status to Subsystem - Electronic Interlocking. **6.** Subsystem - Electronic Interlocking internally responds that the line block direction status of Adjacent Interlocking System changed. **Postcondition:** The line block direction is no longer disabled. 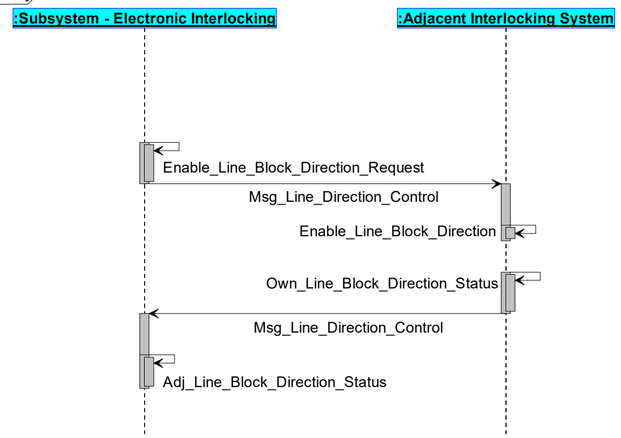 		008400 310900		
Eu.ILS.3837	Info	[Interaction] SCI-ILS IFUC2.18 - Alternative Scenario [SCI-ILS IF SD 2.18.2] **sd** [Interaction] SCI-ILS IFUC2.18 - Alternative Scenario [SCI-ILS IF SD 2.18.2] **Alternative Scenario: Disable direction** **Precondition:** The PDI connection is established. **Interaction 2.18.2.A:** **1.** - Subsystem - Electronic Interlocking detects that it is requested to disable the line block direction. **2.** Subsystem - Electronic Interlocking sends a message to Adjacent Interlocking System to disable the direction of the line block. **3.** Adjacent Interlocking System disables the line block direction. **Interaction 2.18.2.B:** **4.** - Adjacent Interlocking System detects that the line block direction status changed. **5.** Adjacent Interlocking System reports the line block direction status to Subsystem - Electronic Interlocking. **6.** Subsystem - Electronic Interlocking internally responds that the line block direction status of Adjacent Interlocking System changed. **Postcondition:** The line block direction is disabled. 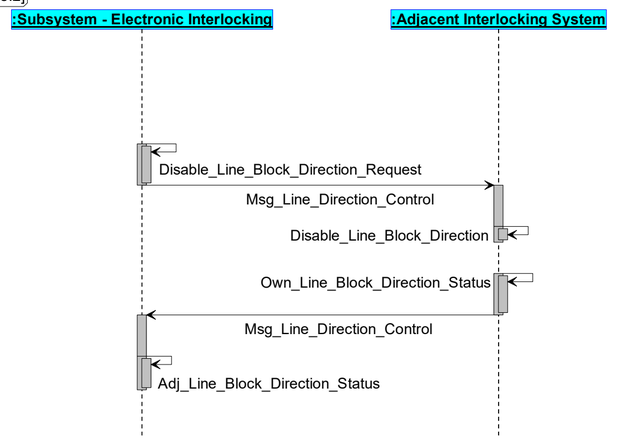 		008400 310900		
Eu.ILS.4250	Info	SCI-ILS IFUC2.19: Send status of TDP	The Interface-UseCase "SCI-ILS IFUC2.19: Send status of TDP" defines the report of the TDP status related to the boundary for one boundary. An interlocking reports the status of the TDP related to the boundary each time it changes.	008400	EUILS-276	object created after baseline 4.2 (1.A)

© EULYNX Partners

ID	Type	Requirement Part 1	Requirement Part 2	Appl.	JIRA	V 4.3 (0.A) > V 4.2 (1.A)
Eu.ILS.4251	Info	[Interaction] SCI-ILS IFUC2.19 - Main Success Scenario [SCI-ILS IF SD 2.19.1] **sd** [Interaction] SCI-ILS IFUC2.19 - Main Success Scenario [SCI-ILS IF SD 2.19.1] **Main Success Scenario: Send status of TDP** **Precondition:** The PDI connection is established. **Interaction 2.19.1.A:** **1.** - Subsystem - Electronic Interlocking detects a change of the status of the own TDP related to the boundary. **2.** Subsystem - Electronic Interlocking reports the new status of the TDP related to the boundary to Adjacent Interlocking System. **3.** Adjacent Interlocking System internally responds that the TDP status of Subsystem - Electronic Interlocking has been updated. **Postcondition:** Subsystem - Electronic Interlocking reported the new status of the TDP related to the boundary to Adjacent Interlocking System. 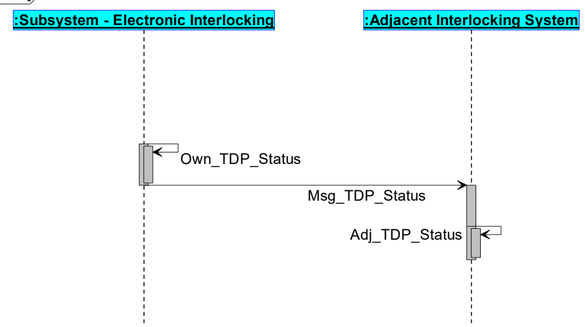 		008400	EUILS-276, EUILS-309	object created after baseline 4.2 (1.A)
Eu.ILS.4164	Head	**3.3.2 SCI-ILS - Functional Partitioning**		Default		
Eu.ILS.1836	Def	[Package] SCI-ILS - Functional Partitioning [Functional Viewpoint - Interface Requirements] **bdd** [Package] SCI-ILS - Functional Partitioning [Functional Viewpoint - Interface Requirements] 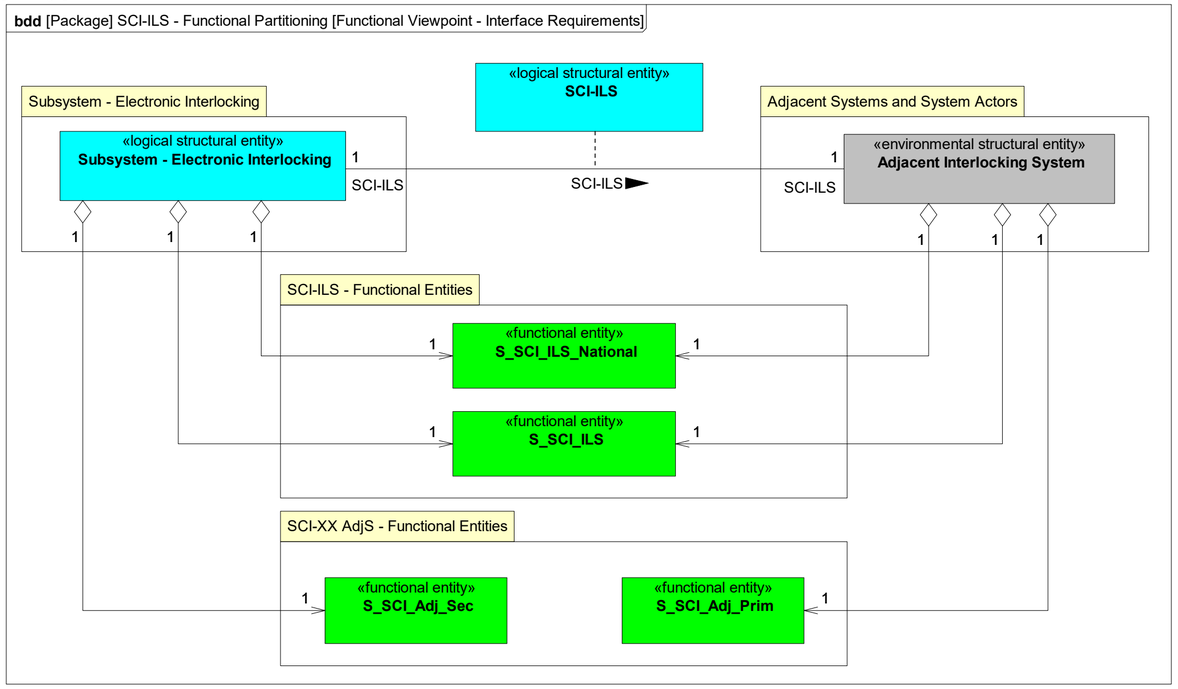 		Default		
Eu.ILS.1374	Info	The generic requirements are specified in [Eu.Doc.119].		Default		
Eu.ILS.4153	Head	**3.3.3 SCI-ILS - Functional Architecture**		Default		
Eu.ILS.1834	Info	SCI-ILS		Default		

ID	Type	Requirement Part 1	Requirement Part 2	Appl.	JIRA	V 4.3 (0.A) > V 4.2 (1.A)
Eu.ILS.1835	Def	[Block] SCI-ILS [Functional Viewpoint - Interface Requirements - Functional Architecture 1] 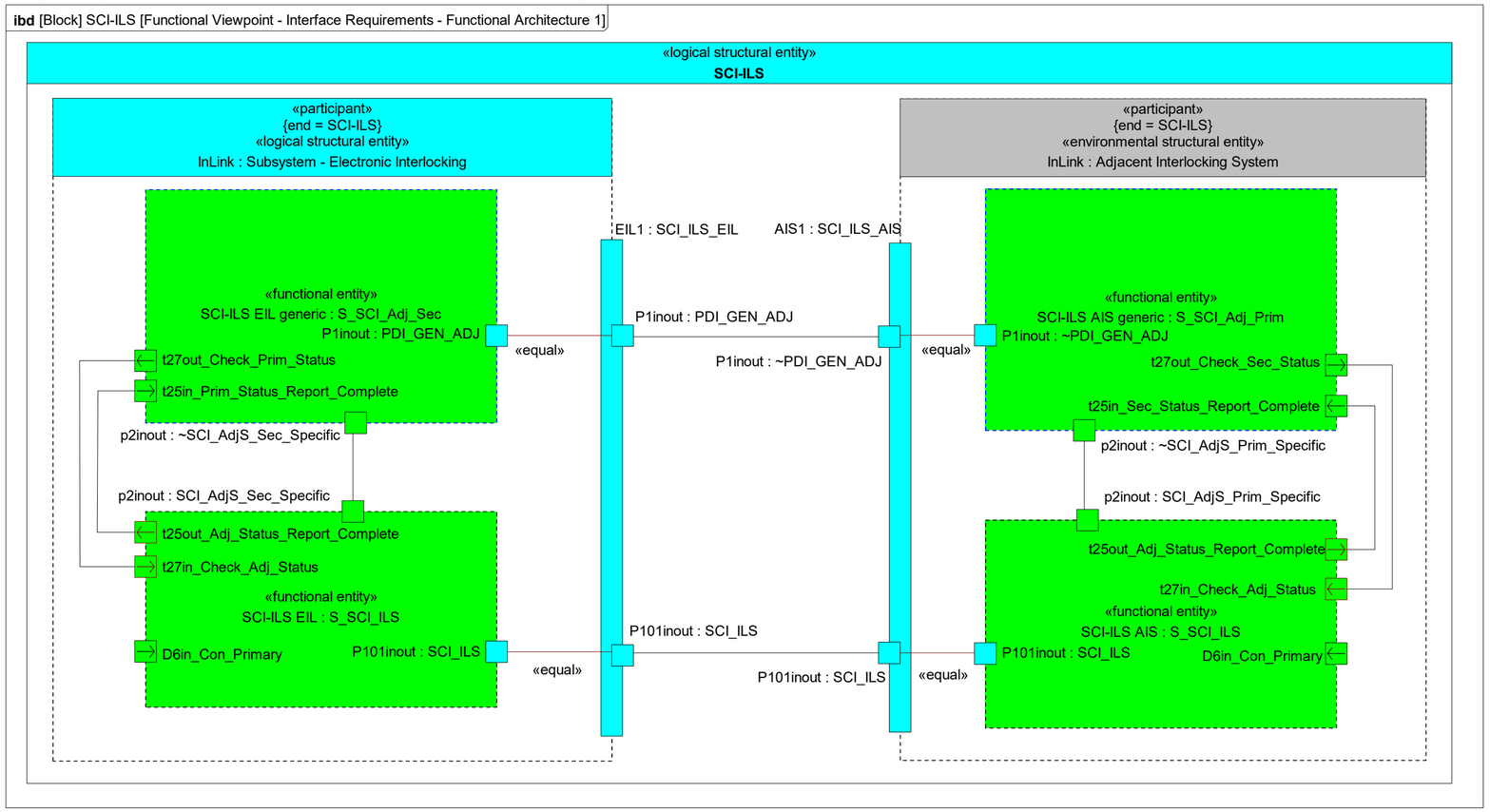 	[Block] SCI-ILS [Functional Viewpoint - Interface Requirements - Functional Architecture 1] defines the functional architecture of the SCI-ILS PDI for one boundary. This diagram shows the exchanges between the generic and specific functional entities.	Default		

ID	Type	Requirement Part 1	Requirement Part 2	Appl.	JIRA	V 4.3 (0.A) > V 4.2 (1.A)
Eu.ILS.4166	Def	[Block] SCI-ILS [Functional Viewpoint - Interface Requirements - Functional Architecture 2] 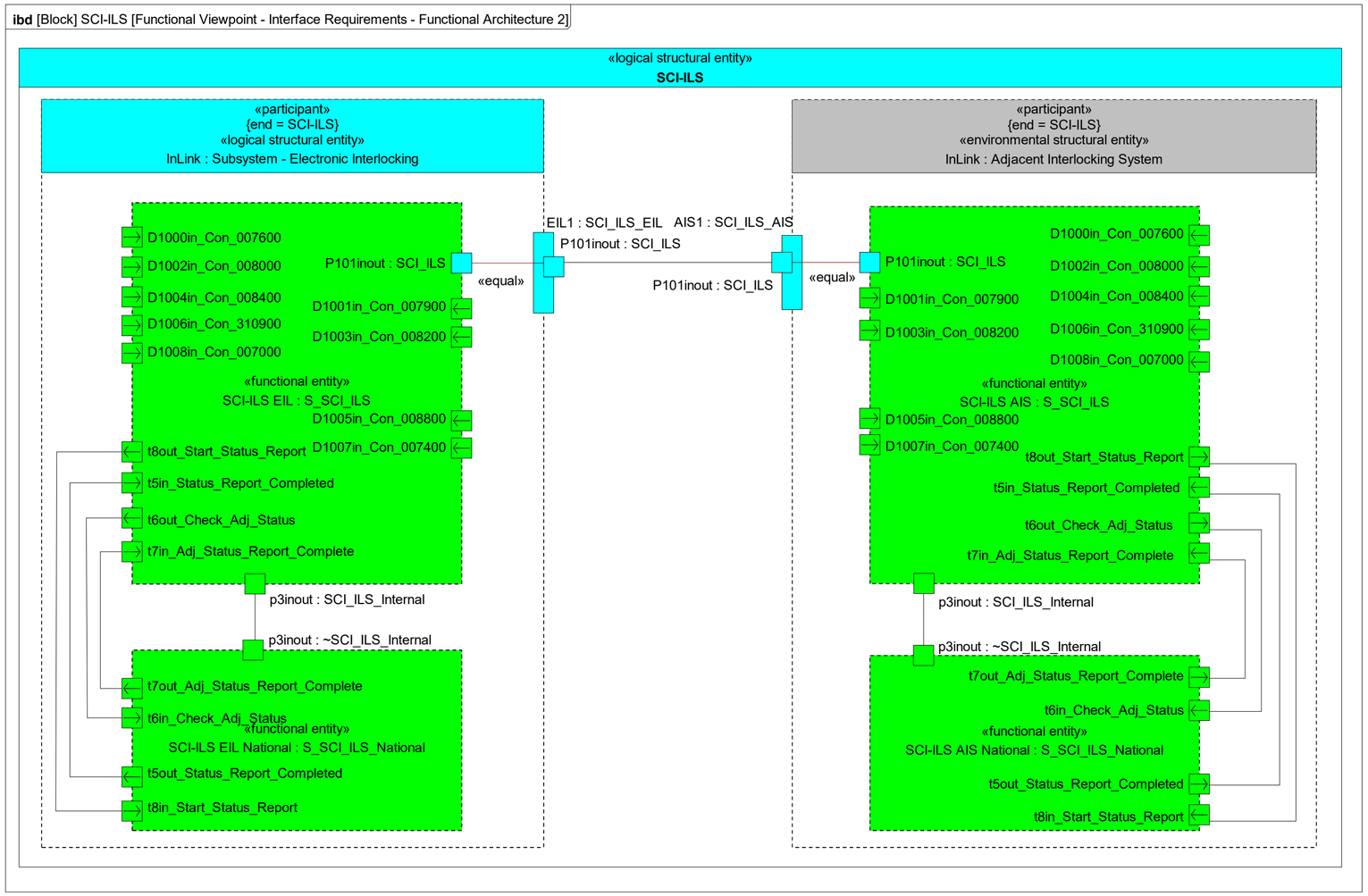 	[Block] SCI-ILS [Functional Viewpoint - Interface Requirements - Functional Architecture 2] defines the functional architecture of the SCI-ILS PDI for one boundary. This diagram shows the exchanges between the specific functional entities.	Default		
Eu.ILS.1830	Info	The defined model elements represent the interface SCI-ILS in a general way. This refers to: - The specific part of the SCI-ILS PDI represented by functional entity instances of S_SCI_ILS in [Block] SCI-ILS [Functional Viewpoint - Interface Requirements - Functional Architecture 1], describes the communication for one boundary. - The generic part of the SCI-ILS PDI represented by functional entity instances of S_SCI_Adj_Prim and S_SCI_Adj_Sec in [Block] SCI-ILS [Functional Viewpoint - Interface Requirements - Functional Architecture 1], describes the communication for all boundaries.		Default		
Eu.ILS.4149	Head	**3.3.4 SCI-ILS - Functional Entities**		Default		
Eu.ILS.3353	Info	S_SCI_ILS	The functional entity S_SCI_ILS represents the EULYNX specific part of the interface. It complements the functional entity S_SCI_ILS_National. An instance of S_SCI_ILS represents one boundary.	-		

ID	Type	Requirement Part 1	Requirement Part 2	Appl.	JIRA	V 4.3 (0.A) > V 4.2 (1.A)
Eu.ILS.3642	Req	[Block] S_SCI_ILS [Functional Viewpoint - Interface Requirements - Functional Entity] 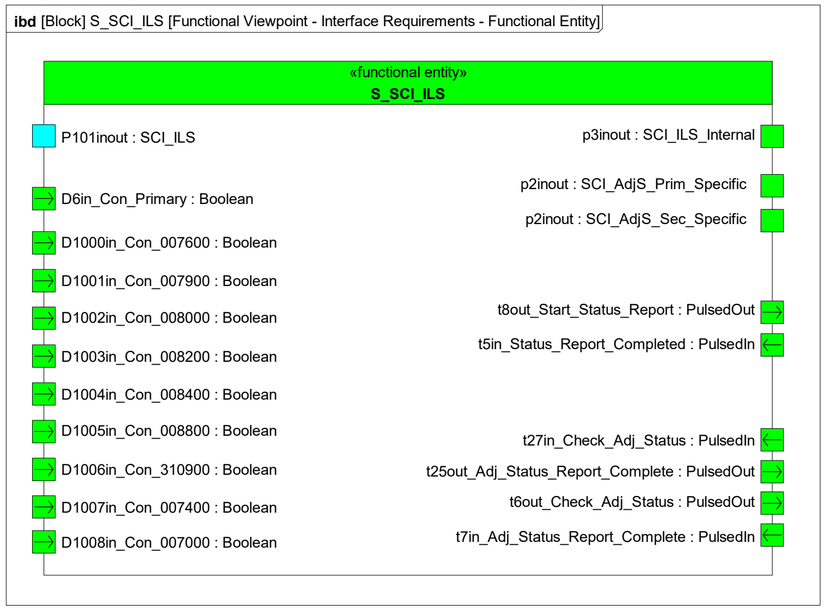 		-		
Eu.ILS.3355	Def	D1000in_Con_007600	The port D1000in_Con_007600 provides the configuration value whether an interlocking is configured for the infrastructure manager 007600.	-		
Eu.ILS.3356	Def	D1001in_Con_007900	The port D1001in_Con_007900 provides the configuration value whether an interlocking is configured for the infrastructure manager 007900.	-		
Eu.ILS.3357	Def	D1002in_Con_008000	The port D1002in_Con_008000 provides the configuration value whether an interlocking is configured for the infrastructure manager 008000.	-		
Eu.ILS.3358	Def	D1003in_Con_008200	The port D1003in_Con_008200 provides the configuration value whether an interlocking is configured for the infrastructure manager 008200.	-		
Eu.ILS.3359	Def	D1004in_Con_008400	The port D1004in_Con_008400 provides the configuration value whether an interlocking is configured for the infrastructure manager 008400.	-		
Eu.ILS.3360	Def	D1005in_Con_008800	The port D1005in_Con_008800 provides the configuration value whether an interlocking is configured for the infrastructure manager 008800.	-		
Eu.ILS.3361	Def	D1006in_Con_310900	The port D1006in_Con_310900 provides the configuration value whether an interlocking is configured for the infrastructure manager 310900.	-		

© EULYNX Partners

ID	Type	Requirement Part 1	Requirement Part 2	Appl.	JIRA	V 4.3 (0.A) > V 4.2 (1.A)
Eu.ILS.3362	Def	D1007in_Con_007400	The port D1007in_Con_ 007400 provides the configuration value whether an interlocking is configured for the infrastructure manager 007400.	-		
Eu.ILS.4168	Def	D1008in_Con_007000	The port D1008in_Con_ 007000 provides the configuration value whether an interlocking is configured for the infrastructure manager 007000.	-		
Eu.ILS.3367	Def	D6in_Con_Primary	The port D6in_Con_Primary provides the configuration value whether an interlocking is the primary communication partner. - True: primary communication partner - False: secondary communication partner	-		
Eu.ILS.4043	Def	P101inout	The port P101inout exchanges information objects according to SCI_ILS.	-		
Eu.ILS.4144	Def	p2inout		-		
Eu.ILS.4145	Def	p2inout		-		
Eu.ILS.4044	Def	p3inout		-		
Eu.ILS.3648	Def	t5in_Status_Report_Completed		-		
Eu.ILS.3878	Def	t27in_Check_Adj_Status		-		
Eu.ILS.3879	Def	t25out_Adj_Status_Report_Complete		-		
Eu.ILS.3880	Def	t6out_Check_Adj_Status		-		
Eu.ILS.3881	Def	t7in_Adj_Status_Report_Complete		-		
Eu.ILS.3892	Def	t8out_Start_Status_Report		-		
Eu.ILS.3378	Info	S_SCI_ILS - Behaviour		-		

© EULYNX Partners

ID	Type	Requirement Part 1	Requirement Part 2	Appl.	JIRA	V 4.3 (0.A) > V 4.2 (1.A)
Eu.ILS.3638	Req	Functional Viewpoint - Interface Requirements - Functional Entity STD 1 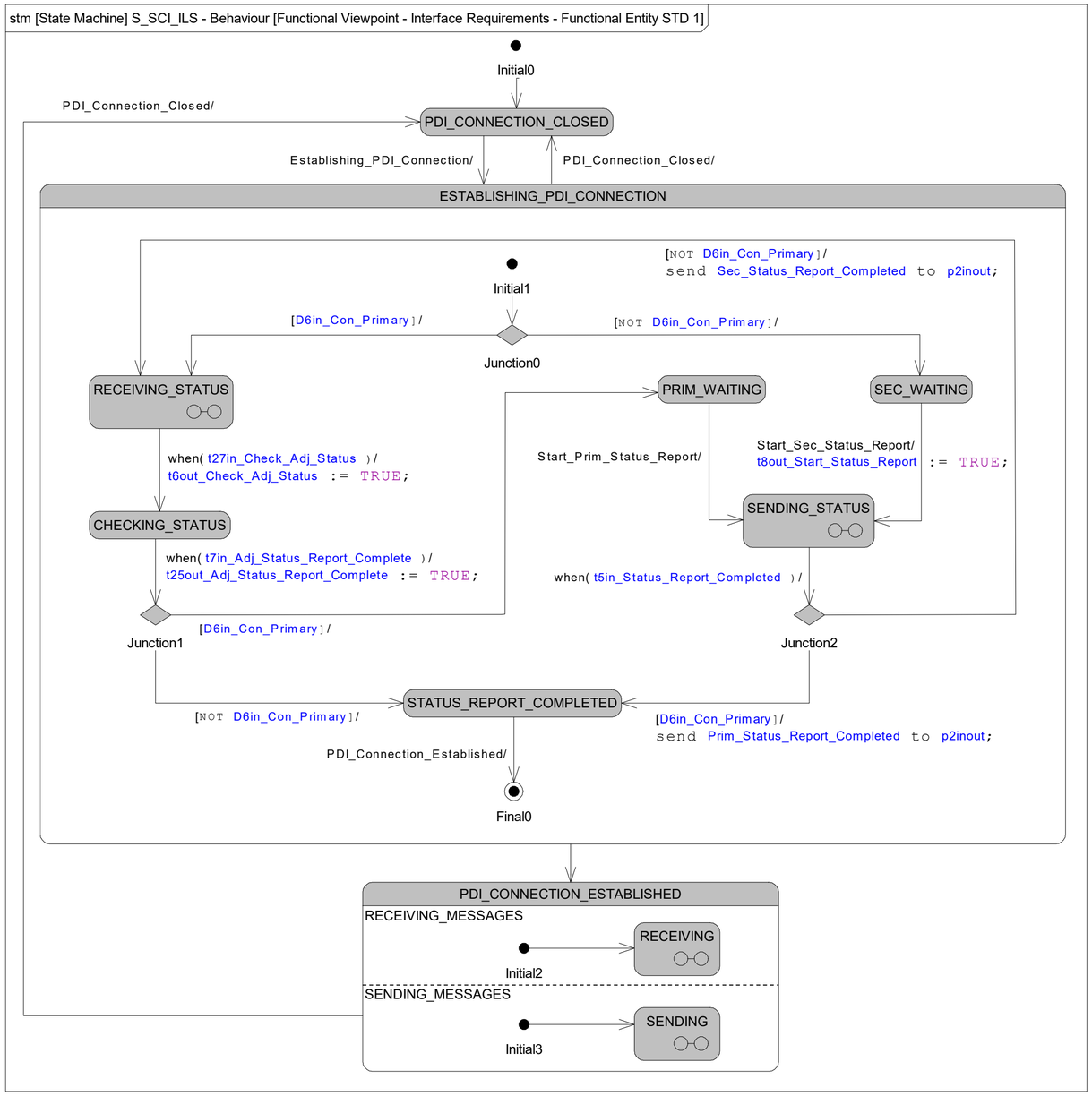 	This state machine diagram describes the requirements for the following functionalities: - definition of the PDI connection states - changes between the PDI connection states and the conditions for these changes	-		
Eu.ILS.3450	Def	Initial0		-		
Eu.ILS.3451	Def	/{Initial0 - PDI_CONNECTION_CLOSED}		-		
Eu.ILS.3455	Def	PDI_CONNECTION_CLOSED		-		
Eu.ILS.3456	Def	Establishing_PDI_Connection/{PDI_CONNECTION_CLOSED - ESTABLISHING_PDI_CONNECTION}		-		
Eu.ILS.3847	Def	ESTABLISHING_PDI_CONNECTION		-		
Eu.ILS.3849	Def	Initial1		-		

© EULYNX Partners

ID	Type	Requirement Part 1	Requirement Part 2	Appl.	JIRA	V 4.3 (0.A) > V 4.2 (1.A)
Eu.ILS.3850	Def	/{Initial1 - Junction0}		-		
Eu.ILS.3851	Def	Junction0		-		
Eu.ILS.3852	Def	[D6in_Con_Primary]/{Junction0 - RECEIVING_STATUS}		-		
Eu.ILS.3853	Def	[NOT D6in_Con_Primary]/{Junction0 - SEC_WAITING}		-		
Eu.ILS.3854	Def	CHECKING_STATUS		-		
Eu.ILS.3855	Def	when(t7in_Adj_Status_Report_Complete)/ t25out_Adj_Status_Report_Complete := TRUE;{CHECKING_STATUS - Junction1}		-		
Eu.ILS.4156	Def	Junction1		-		
Eu.ILS.4157	Def	[D6in_Con_Primary]/{Junction1 - PRIM_WAITING}		-		
Eu.ILS.3865	Def	[NOT D6in_Con_Primary]/{Junction1 - STATUS_REPORT_COMPLETED}		-		
Eu.ILS.3856	Def	STATUS_REPORT_COMPLETED		-		
Eu.ILS.3641	Def	PDI_Connection_Established/{STATUS_REPORT_COMPLETED - Final0}		-		
Eu.ILS.3862	Def	PRIM_WAITING		-		
Eu.ILS.3863	Def	Start_Prim_Status_Report/{PRIM_WAITING - SENDING_STATUS}		-		
Eu.ILS.3873	Def	SEC_WAITING		-		
Eu.ILS.3874	Def	Start_Sec_Status_Report/ t8out_Start_Status_Report := TRUE;{SEC_WAITING - SENDING_STATUS}		-		
Eu.ILS.3449	Def	PDI_Connection_Closed/{ESTABLISHING_PDI_CONNECTION - PDI_CONNECTION_CLOSED}		-		
Eu.ILS.3417	Def	Final0		-		
Eu.ILS.3848	Def	/{ESTABLISHING_PDI_CONNECTION - PDI_CONNECTION_ESTABLISHED}		-		
Eu.ILS.4158	Def	Junction2		-		
Eu.ILS.3448	Def	[NOT D6in_Con_Primary]/ send Sec_Status_Report_Completed to p2inout;{Junction2 - RECEIVING_STATUS}		-		
Eu.ILS.3415	Def	[D6in_Con_Primary]/ send Prim_Status_Report_Completed to p2inout;{Junction2 - STATUS_REPORT_COMPLETED}		-		
Eu.ILS.4159	Def	RECEIVING_STATUS		-		
Eu.ILS.4160	Req	Functional Viewpoint - Interface Requirements - Functional Entity STD 1.1 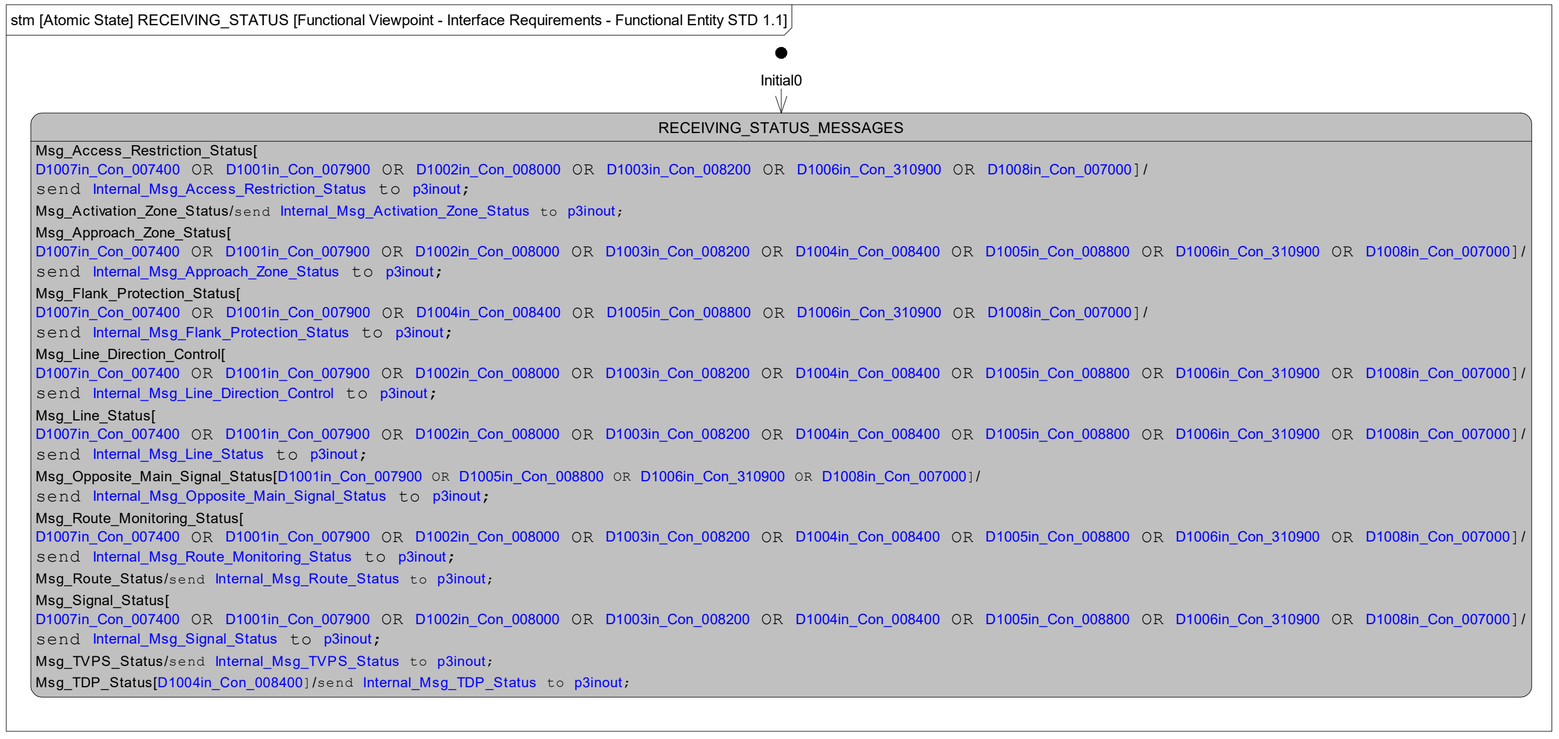 	This state machine diagram describes the requirements for the following functionalities: - receive status messages from the communication partner during initial PDI status report and forward them to the internal logic	-	EUILS-276	**a_JIRA_BL4R3:** EUILS-276

ID	Type	Requirement Part 1	Requirement Part 2	Appl.	JIRA	V 4.3 (0.A) > V 4.2 (1.A)
Eu.ILS.4067	Def	Initial0		-		
Eu.ILS.4068	Def	/{Initial0 - RECEIVING_STATUS_MESSAGES}		-		
Eu.ILS.4069	Def	RECEIVING_STATUS_MESSAGES		-		
Eu.ILS.4119	Def	Msg_Access_Restriction_Status[D1007in_Con_007400 OR D1001in_Con_007900 OR D1002in_Con_008000 OR D1003in_Con_008200 OR D1006in_Con_310900 OR D1008in_Con_007000]/ send Internal_Msg_Access_Restriction_Status to p3inout;{State-internal in RECEIVING_STATUS_MESSAGES}		-		
Eu.ILS.4123	Def	Msg_Activation_Zone_Status/send Internal_Msg_Activation_Zone_Status to p3inout;{State-internal in RECEIVING_STATUS_MESSAGES}		-		
Eu.ILS.4124	Def	Msg_Approach_Zone_Status[D1007in_Con_007400 OR D1001in_Con_007900 OR D1002in_Con_008000 OR D1003in_Con_008200 OR D1004in_Con_008400 OR D1005in_Con_008800 OR D1006in_Con_310900 OR D1008in_Con_007000]/ send Internal_Msg_Approach_Zone_Status to p3inout;{State-internal in RECEIVING_STATUS_MESSAGES}		-		
Eu.ILS.4126	Def	Msg_Flank_Protection_Status[D1007in_Con_007400 OR D1001in_Con_007900 OR D1004in_Con_008400 OR D1005in_Con_008800 OR D1006in_Con_310900 OR D1008in_Con_007000]/ send Internal_Msg_Flank_Protection_Status to p3inout;{State-internal in RECEIVING_STATUS_MESSAGES}		-		
Eu.ILS.4127	Def	Msg_Line_Direction_Control[D1007in_Con_007400 OR D1001in_Con_007900 OR D1002in_Con_008000 OR D1003in_Con_008200 OR D1004in_Con_008400 OR D1005in_Con_008800 OR D1006in_Con_310900 OR D1008in_Con_007000]/ send Internal_Msg_Line_Direction_Control to p3inout;{State-internal in RECEIVING_STATUS_MESSAGES}		-		
Eu.ILS.4128	Def	Msg_Line_Status[D1007in_Con_007400 OR D1001in_Con_007900 OR D1002in_Con_008000 OR D1003in_Con_008200 OR D1004in_Con_008400 OR D1005in_Con_008800 OR D1006in_Con_310900 OR D1008in_Con_007000]/ send Internal_Msg_Line_Status to p3inout;{State-internal in RECEIVING_STATUS_MESSAGES}		-		
Eu.ILS.4129	Def	Msg_Opposite_Main_Signal_Status[D1001in_Con_007900 OR D1005in_Con_008800 OR D1006in_Con_310900 OR D1008in_Con_007000]/ send Internal_Msg_Opposite_Main_Signal_Status to p3inout;{State-internal in RECEIVING_STATUS_MESSAGES}		-		
Eu.ILS.4130	Def	Msg_Route_Monitoring_Status[D1007in_Con_007400 OR D1001in_Con_007900 OR D1002in_Con_008000 OR D1003in_Con_008200 OR D1004in_Con_008400 OR D1005in_Con_008800 OR D1006in_Con_310900 OR D1008in_Con_007000]/ send Internal_Msg_Route_Monitoring_Status to p3inout;{State-internal in RECEIVING_STATUS_MESSAGES}		-		
Eu.ILS.4120	Def	Msg_Route_Status/send Internal_Msg_Route_Status to p3inout;{State-internal in RECEIVING_STATUS_MESSAGES}		-		
Eu.ILS.4121	Def	Msg_Signal_Status[D1007in_Con_007400 OR D1001in_Con_007900 OR D1002in_Con_008000 OR D1003in_Con_008200 OR D1004in_Con_008400 OR D1005in_Con_008800 OR D1006in_Con_310900 OR D1008in_Con_007000]/ send Internal_Msg_Signal_Status to p3inout;{State-internal in RECEIVING_STATUS_MESSAGES}		-		
Eu.ILS.4122	Def	Msg_TVPS_Status/send Internal_Msg_TVPS_Status to p3inout;{State-internal in RECEIVING_STATUS_MESSAGES}		-		
Eu.ILS.4260	Def	Msg_TDP_Status[D1004in_Con_008400]/send Internal_Msg_TDP_Status to p3inout;{State-internal in RECEIVING_STATUS_MESSAGES}		-	EUILS-276, EUILS-309	object created after baseline 4.2 (1.A)
Eu.ILS.3859	Def	when(t27in_Check_Adj_Status)/ t6out_Check_Adj_Status := TRUE;{RECEIVING_STATUS - CHECKING_STATUS}		-		
Eu.ILS.4161	Def	SENDING_STATUS		-		
Eu.ILS.4162	Req	Functional Viewpoint - Interface Requirements - Functional Entity STD 1.2 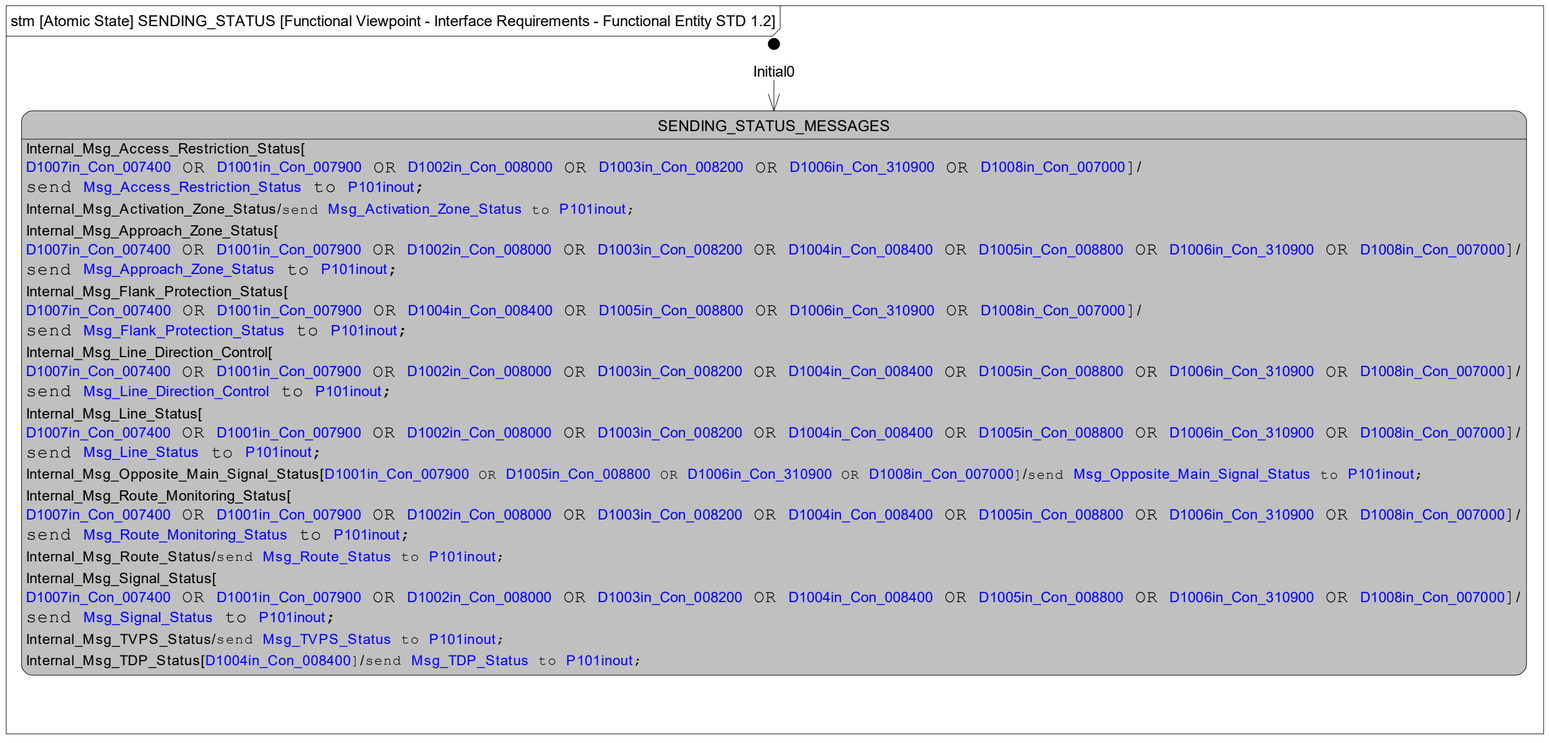 	This state machine diagram describes the requirements for the following functionalities: - send status messages to the communication partner during initial PDI status report based on information of the internal logic	-	EUILS-276	**a_JIRA_BL4R3:** EUILS-276

ID	Type	Requirement Part 1	Requirement Part 2	Appl.	JIRA	V 4.3 (0.A) > V 4.2 (1.A)
Eu.ILS.4072	Def	Initial0		-		
Eu.ILS.4073	Def	/{Initial0 - SENDING_STATUS_MESSAGES}		-		
Eu.ILS.4074	Def	SENDING_STATUS_MESSAGES		-		
Eu.ILS.4131	Def	Internal_Msg_Access_Restriction_Status[D1007in_Con_007400 OR D1001in_Con_007900 OR D1002in_Con_008000 OR D1003in_Con_008200 OR D1006in_Con_310900 OR D1008in_Con_007000]/ send Msg_Access_Restriction_Status to P101inout;{State-internal in SENDING_STATUS_MESSAGES}		-		
Eu.ILS.4135	Def	Internal_Msg_Activation_Zone_Status/send Msg_Activation_Zone_Status to P101inout;{State-internal in SENDING_STATUS_MESSAGES}		-		
Eu.ILS.4136	Def	Internal_Msg_Approach_Zone_Status[D1007in_Con_007400 OR D1001in_Con_007900 OR D1002in_Con_008000 OR D1003in_Con_008200 OR D1004in_Con_008400 OR D1005in_Con_008800 OR D1006in_Con_310900 OR D1008in_Con_007000]/ send Msg_Approach_Zone_Status to P101inout;{State-internal in SENDING_STATUS_MESSAGES}		-		
Eu.ILS.4138	Def	Internal_Msg_Flank_Protection_Status[D1007in_Con_007400 OR D1001in_Con_007900 OR D1004in_Con_008400 OR D1005in_Con_008800 OR D1006in_Con_310900 OR D1008in_Con_007000]/ send Msg_Flank_Protection_Status to P101inout;{State-internal in SENDING_STATUS_MESSAGES}		-		
Eu.ILS.4139	Def	Internal_Msg_Line_Direction_Control[D1007in_Con_007400 OR D1001in_Con_007900 OR D1002in_Con_008000 OR D1003in_Con_008200 OR D1004in_Con_008400 OR D1005in_Con_008800 OR D1006in_Con_310900 OR D1008in_Con_007000]/ send Msg_Line_Direction_Control to P101inout;{State-internal in SENDING_STATUS_MESSAGES}		-		
Eu.ILS.4140	Def	Internal_Msg_Line_Status[D1007in_Con_007400 OR D1001in_Con_007900 OR D1002in_Con_008000 OR D1003in_Con_008200 OR D1004in_Con_008400 OR D1005in_Con_008800 OR D1006in_Con_310900 OR D1008in_Con_007000]/ send Msg_Line_Status to P101inout;{State-internal in SENDING_STATUS_MESSAGES}		-		
Eu.ILS.4141	Def	Internal_Msg_Opposite_Main_Signal_Status[D1001in_Con_007900 OR D1005in_Con_008800 OR D1006in_Con_310900 OR D1008in_Con_007000]/send Msg_Opposite_Main_Signal_Status to P101inout;{State-internal in SENDING_STATUS_MESSAGES}		-		
Eu.ILS.4142	Def	Internal_Msg_Route_Monitoring_Status[D1007in_Con_007400 OR D1001in_Con_007900 OR D1002in_Con_008000 OR D1003in_Con_008200 OR D1004in_Con_008400 OR D1005in_Con_008800 OR D1006in_Con_310900 OR D1008in_Con_007000]/ send Msg_Route_Monitoring_Status to P101inout;{State-internal in SENDING_STATUS_MESSAGES}		-		
Eu.ILS.4132	Def	Internal_Msg_Route_Status/send Msg_Route_Status to P101inout;{State-internal in SENDING_STATUS_MESSAGES}		-		
Eu.ILS.4133	Def	Internal_Msg_Signal_Status[D1007in_Con_007400 OR D1001in_Con_007900 OR D1002in_Con_008000 OR D1003in_Con_008200 OR D1004in_Con_008400 OR D1005in_Con_008800 OR D1006in_Con_310900 OR D1008in_Con_007000]/ send Msg_Signal_Status to P101inout;{State-internal in SENDING_STATUS_MESSAGES}		-		
Eu.ILS.4134	Def	Internal_Msg_TVPS_Status/send Msg_TVPS_Status to P101inout;{State-internal in SENDING_STATUS_MESSAGES}		-		
Eu.ILS.4261	Def	Internal_Msg_TDP_Status[D1004in_Con_008400]/send Msg_TDP_Status to P101inout;{State-internal in SENDING_STATUS_MESSAGES}		-	EUILS-276, EUILS-309	object created after baseline 4.2 (1.A)
Eu.ILS.4163	Def	when(t5in_Status_Report_Completed)/{SENDING_STATUS - Junction2}		-		
Eu.ILS.3875	Def	PDI_CONNECTION_ESTABLISHED		-		
Eu.ILS.3637	Def	PDI_Connection_Closed/{PDI_CONNECTION_ESTABLISHED - PDI_CONNECTION_CLOSED}		-		
Eu.ILS.4049	Def	RECEIVING_MESSAGES		-		
Eu.ILS.4050	Def	Initial2		-		
Eu.ILS.4051	Def	/{Initial2 - RECEIVING}		-		
Eu.ILS.4052	Def	RECEIVING		-		

© EULYNX Partners

ID	Type	Requirement Part 1	Requirement Part 2	Appl.	JIRA	V 4.3 (0.A) > V 4.2 (1.A)
Eu.ILS.4053	Req	Functional Viewpoint - Interface Requirements - Functional Entity STD 1.3 stm [Atomic State] RECEIVING [Functional Viewpoint - Interface Requirements - Functional Entity STD 1.3] Initial0 RECEIVING_MESSAGES Cd_Access_Restriction_Request[D1007in_Con_007400 OR D1001in_Con_007900 OR D1003in_Con_008200 OR D1006in_Con_310900 OR D1008in_Con_007000]/ send Internal_Cd_Access_Restriction_Request to p3inout; Cd_Flank_Protection_Request[D1007in_Con_007400 OR D1001in_Con_007900 OR D1004in_Con_008400 OR D1005in_Con_008800 OR D1006in_Con_310900 OR D1008in_Con_007000]/ send Internal_Cd_Flank_Protection_Request to p3inout; Cd_Route_Cancellation_Request[D1007in_Con_007400 OR D1001in_Con_007900 OR D1002in_Con_008000 OR D1003in_Con_008200 OR D1004in_Con_008400 OR D1005in_Con_008800 OR D1006in_Con_310900 OR D1008in_Con_007000]/ send Internal_Cd_Route_Cancellation_Request to p3inout; Cd_Route_Pretest_Request[D1007in_Con_007400 OR D1008in_Con_007000]/ send Internal_Cd_Route_Pretest_Request to p3inout; Cd_Route_Release_Inhibition_Activation_Request[D1007in_Con_007400]/ send Internal_Cd_Route_Release_Inhibition_Activation_Request to p3inout; Cd_Route_Request/send Internal_Cd_Route_Request to p3inout; Msg_Access_Restriction_Status[D1007in_Con_007400 OR D1001in_Con_007900 OR D1002in_Con_008000 OR D1003in_Con_008200 OR D1006in_Con_310900 OR D1008in_Con_007000]/ send Internal_Msg_Access_Restriction_Status to p3inout; Msg_Activation_Zone_Status/send Internal_Msg_Activation_Zone_Status to p3inout; Msg_Approach_Zone_Status[D1007in_Con_007400 OR D1001in_Con_007900 OR D1002in_Con_008000 OR D1003in_Con_008200 OR D1004in_Con_008400 OR D1005in_Con_008800 OR D1006in_Con_310900 OR D1008in_Con_007000]/ send Internal_Msg_Approach_Zone_Status to p3inout; Msg_Flank_Protection_Status[D1007in_Con_007400 OR D1001in_Con_007900 OR D1004in_Con_008400 OR D1005in_Con_008800 OR D1006in_Con_310900 OR D1008in_Con_007000]/ send Internal_Msg_Flank_Protection_Status to p3inout; Msg_Line_Direction_Control[D1007in_Con_007400 OR D1001in_Con_007900 OR D1002in_Con_008000 OR D1003in_Con_008200 OR D1004in_Con_008400 OR D1005in_Con_008800 OR D1006in_Con_310900 OR D1008in_Con_007000]/ send Internal_Msg_Line_Direction_Control to p3inout; Msg_Line_Status[D1007in_Con_007400 OR D1001in_Con_007900 OR D1002in_Con_008000 OR D1003in_Con_008200 OR D1004in_Con_008400 OR D1005in_Con_008800 OR D1006in_Con_310900]/ send Internal_Msg_Line_Status to p3inout; Msg_Opposite_Main_Signal_Status[D1001in_Con_007900 OR D1005in_Con_008800 OR D1006in_Con_310900 OR D1008in_Con_007000]/ send Internal_Msg_Opposite_Main_Signal_Status to p3inout; Msg_Route_Monitoring_Status[D1007in_Con_007400 OR D1001in_Con_007900 OR D1002in_Con_008000 OR D1003in_Con_008200 OR D1004in_Con_008400 OR D1005in_Con_008800 OR D1006in_Con_310900 OR D1008in_Con_007000]/ send Internal_Msg_Route_Monitoring_Status to p3inout; Msg_Route_Pretest_Status[D1007in_Con_007400 OR D1008in_Con_007000]/send Internal_Msg_Route_Pretest_Status to p3inout; Msg_Route_Release_Inhibition_Status[D1007in_Con_007400]/send Internal_Msg_Route_Release_Inhibition_Status to p3inout; Msg_Route_Status/send Internal_Msg_Route_Status to p3inout; Msg_Signal_Status[D1007in_Con_007400 OR D1001in_Con_007900 OR D1002in_Con_008000 OR D1003in_Con_008200 OR D1004in_Con_008400 OR D1005in_Con_008800 OR D1006in_Con_310900 OR D1008in_Con_007000]/ send Internal_Msg_Signal_Status to p3inout; Msg_Train_Operated_Route_Release_Status/send Internal_Msg_Train_Operated_Route_Release_Status to p3inout; Msg_TVPS_Status/send Internal_Msg_TVPS_Status to p3inout; Cd_Abort_Route_Cancellation_Request[D1004in_Con_008400]/send Internal_Cd_Abort_Route_Cancellation_Request to p3inout; Msg_TDP_Status[D1004in_Con_008400]/send Internal_Msg_TDP_Status to p3inout;	This state machine diagram describes the requirements for the following functionalities: - receive status messages from the communication partner during established PDI connection and forward them to the internal logic - receive commands from the communication partner during established PDI connection and forward them to the internal logic	-	EUILS-276	**a_JIRA_BL4R3:** EUILS-276
Eu.ILS.4054	Def	Initial0		-		
Eu.ILS.4055	Def	/{Initial0 - RECEIVING_MESSAGES}		-		
Eu.ILS.4056	Def	RECEIVING_MESSAGES		-		
Eu.ILS.4077	Def	Cd_Access_Restriction_Request[D1007in_Con_007400 OR D1001in_Con_007900 OR D1003in_Con_008200 OR D1006in_Con_310900 OR D1008in_Con_007000]/ send Internal_Cd_Access_Restriction_Request to p3inout;{State-internal in RECEIVING_MESSAGES}		-		
Eu.ILS.4088	Def	Cd_Flank_Protection_Request[D1007in_Con_007400 OR D1001in_Con_007900 OR D1004in_Con_008400 OR D1005in_Con_008800 OR D1006in_Con_310900 OR D1008in_Con_007000]/ send Internal_Cd_Flank_Protection_Request to p3inout;{State-internal in RECEIVING_MESSAGES}		-		

© EULYNX Partners

ID	Type	Requirement Part 1	Requirement Part 2	Appl.	JIRA	V 4.3 (0.A) > V 4.2 (1.A)
Eu.ILS.4091	Def	Cd_Route_Cancellation_Request[D1007in_Con_007400 OR D1001in_Con_007900 OR D1002in_Con_008000 OR D1003in_Con_008200 OR D1004in_Con_008400 OR D1005in_Con_008800 OR D1006in_Con_310900 OR D1008in_Con_007000]/ send Internal_Cd_Route_Cancellation_Request to p3inout;{State-internal in RECEIVING_MESSAGES}		-		
Eu.ILS.4092	Def	Cd_Route_Pretest_Request[D1007in_Con_007400 OR D1008in_Con_007000]/ send Internal_Cd_Route_Pretest_Request to p3inout;{State-internal in RECEIVING_MESSAGES}		-		
Eu.ILS.4093	Def	Cd_Route_Release_Inhibition_Activation_Request[D1007in_Con_007400]/ send Internal_Cd_Route_Release_Inhibition_Activation_Request to p3inout;{State-internal in RECEIVING_MESSAGES}		-		
Eu.ILS.4094	Def	Cd_Route_Request/send Internal_Cd_Route_Request to p3inout;{State-internal in RECEIVING_MESSAGES}		-		
Eu.ILS.4095	Def	Msg_Access_Restriction_Status[D1007in_Con_007400 OR D1001in_Con_007900 OR D1002in_Con_008000 OR D1003in_Con_008200 OR D1006in_Con_310900 OR D1008in_Con_007000]/ send Internal_Msg_Access_Restriction_Status to p3inout;{State-internal in RECEIVING_MESSAGES}		-		
Eu.ILS.4096	Def	Msg_Activation_Zone_Status/send Internal_Msg_Activation_Zone_Status to p3inout;{State-internal in RECEIVING_MESSAGES}		-		
Eu.ILS.4097	Def	Msg_Approach_Zone_Status[D1007in_Con_007400 OR D1001in_Con_007900 OR D1002in_Con_008000 OR D1003in_Con_008200 OR D1004in_Con_008400 OR D1005in_Con_008800 OR D1006in_Con_310900 OR D1008in_Con_007000]/ send Internal_Msg_Approach_Zone_Status to p3inout;{State-internal in RECEIVING_MESSAGES}		-		
Eu.ILS.4079	Def	Msg_Flank_Protection_Status[D1007in_Con_007400 OR D1001in_Con_007900 OR D1004in_Con_008400 OR D1005in_Con_008800 OR D1006in_Con_310900 OR D1008in_Con_007000]/ send Internal_Msg_Flank_Protection_Status to p3inout;{State-internal in RECEIVING_MESSAGES}		-		
Eu.ILS.4080	Def	Msg_Line_Direction_Control[D1007in_Con_007400 OR D1001in_Con_007900 OR D1002in_Con_008000 OR D1003in_Con_008200 OR D1004in_Con_008400 OR D1005in_Con_008800 OR D1006in_Con_310900 OR D1008in_Con_007000]/ send Internal_Msg_Line_Direction_Control to p3inout;{State-internal in RECEIVING_MESSAGES}		-		
Eu.ILS.4081	Def	Msg_Line_Status[D1007in_Con_007400 OR D1001in_Con_007900 OR D1002in_Con_008000 OR D1003in_Con_008200 OR D1004in_Con_008400 OR D1005in_Con_008800 OR D1006in_Con_310900]/ send Internal_Msg_Line_Status to p3inout;{State-internal in RECEIVING_MESSAGES}		-		
Eu.ILS.4082	Def	Msg_Opposite_Main_Signal_Status[D1001in_Con_007900 OR D1005in_Con_008800 OR D1006in_Con_310900 OR D1008in_Con_007000]/ send Internal_Msg_Opposite_Main_Signal_Status to p3inout;{State-internal in RECEIVING_MESSAGES}		-		
Eu.ILS.4083	Def	Msg_Route_Monitoring_Status[D1007in_Con_007400 OR D1001in_Con_007900 OR D1002in_Con_008000 OR D1003in_Con_008200 OR D1004in_Con_008400 OR D1005in_Con_008800 OR D1006in_Con_310900 OR D1008in_Con_007000]/ send Internal_Msg_Route_Monitoring_Status to p3inout;{State-internal in RECEIVING_MESSAGES}		-		
Eu.ILS.4084	Def	Msg_Route_Pretest_Status[D1007in_Con_007400 OR D1008in_Con_007000]/send Internal_Msg_Route_Pretest_Status to p3inout;{State-internal in RECEIVING_MESSAGES}		-		
Eu.ILS.4085	Def	Msg_Route_Release_Inhibition_Status[D1007in_Con_007400]/send Internal_Msg_Route_Release_Inhibition_Status to p3inout;{State-internal in RECEIVING_MESSAGES}		-		
Eu.ILS.4086	Def	Msg_Route_Status/send Internal_Msg_Route_Status to p3inout;{State-internal in RECEIVING_MESSAGES}		-		
Eu.ILS.4087	Def	Msg_Signal_Status[D1007in_Con_007400 OR D1001in_Con_007900 OR D1002in_Con_008000 OR D1003in_Con_008200 OR D1004in_Con_008400 OR D1005in_Con_008800 OR D1006in_Con_310900 OR D1008in_Con_007000]/ send Internal_Msg_Signal_Status to p3inout;{State-internal in RECEIVING_MESSAGES}		-		
Eu.ILS.4089	Def	Msg_Train_Operated_Route_Release_Status/send Internal_Msg_Train_Operated_Route_Release_Status to p3inout;{State-internal in RECEIVING_MESSAGES}		-		
Eu.ILS.4090	Def	Msg_TVPS_Status/send Internal_Msg_TVPS_Status to p3inout;{State-internal in RECEIVING_MESSAGES}		-		
Eu.ILS.4191	Def	Cd_Abort_Route_Cancellation_Request[D1004in_Con_008400]/send Internal_Cd_Abort_Route_Cancellation_Request to p3inout;{State-internal in RECEIVING_MESSAGES}		-		
Eu.ILS.4262	Def	Msg_TDP_Status[D1004in_Con_008400]/send Internal_Msg_TDP_Status to p3inout;{State-internal in RECEIVING_MESSAGES}		-	EUILS-276, EUILS-309	object created after baseline 4.2 (1.A)
Eu.ILS.4057	Def	SENDING_MESSAGES		-		
Eu.ILS.4058	Def	Initial3		-		
Eu.ILS.4059	Def	/{Initial3 - SENDING}		-		
Eu.ILS.4060	Def	SENDING		-		

© EULYNX Partners

ID	Type	Requirement Part 1	Requirement Part 2	Appl.	JIRA	V 4.3 (0.A) > V 4.2 (1.A)
Eu.ILS.4061	Req	Functional Viewpoint - Interface Requirements - Functional Entity STD 1.4 stm [Atomic State] SENDING [Functional Viewpoint - Interface Requirements - Functional Entity STD 1.4] Initial0 SENDING_MESSAGES Internal_Cd_Access_Restriction_Request[D1007in_Con_007400 OR D1001in_Con_007900 OR D1003in_Con_008200 OR D1006in_Con_310900 OR D1008in_Con_007000]/ send Cd_Access_Restriction_Request to P101inout; Internal_Cd_Flank_Protection_Request[D1007in_Con_007400 OR D1001in_Con_007900 OR D1004in_Con_008400 OR D1005in_Con_008800 OR D1006in_Con_310900 OR D1008in_Con_007000]/send Cd_Flank_Protection_Request to P101inout; Internal_Cd_Route_Cancellation_Request[D1007in_Con_007400 OR D1001in_Con_007900 OR D1002in_Con_008000 OR D1003in_Con_008200 OR D1004in_Con_008400 OR D1005in_Con_008800 OR D1006in_Con_310900 OR D1008in_Con_007000]/ send Cd_Route_Cancellation_Request to P101inout; Internal_Cd_Route_Pretest_Request[D1007in_Con_007400 OR D1008in_Con_007000]/send Cd_Route_Pretest_Request to P101inout; Internal_Cd_Route_Release_Inhibition_Activation_Request[D1007in_Con_007400]/send Cd_Route_Release_Inhibition_Activation_Request to P101inout; Internal_Cd_Route_Request/send Cd_Route_Request to P101inout; Internal_Msg_Access_Restriction_Status[D1007in_Con_007400 OR D1001in_Con_007900 OR D1002in_Con_008000 OR D1003in_Con_008200 OR D1006in_Con_310900 OR D1008in_Con_007000]/ send Msg_Access_Restriction_Status to P101inout; Internal_Msg_Activation_Zone_Status/send Msg_Activation_Zone_Status to P101inout; Internal_Msg_Approach_Zone_Status[D1007in_Con_007400 OR D1001in_Con_007900 OR D1002in_Con_008000 OR D1003in_Con_008200 OR D1004in_Con_008400 OR D1005in_Con_008800 OR D1006in_Con_310900 OR D1008in_Con_007000]/ send Msg_Approach_Zone_Status to P101inout; Internal_Msg_Flank_Protection_Status[D1007in_Con_007400 OR D1001in_Con_007900 OR D1004in_Con_008400 OR D1005in_Con_008800 OR D1006in_Con_310900 OR D1008in_Con_007000]/ send Msg_Flank_Protection_Status to P101inout; Internal_Msg_Line_Direction_Control[D1007in_Con_007400 OR D1001in_Con_007900 OR D1002in_Con_008000 OR D1003in_Con_008200 OR D1004in_Con_008400 OR D1005in_Con_008800 OR D1006in_Con_310900 OR D1008in_Con_007000]/ send Msg_Line_Direction_Control to P101inout; Internal_Msg_Line_Status[D1007in_Con_007400 OR D1001in_Con_007900 OR D1002in_Con_008000 OR D1003in_Con_008200 OR D1004in_Con_008400 OR D1005in_Con_008800 OR D1006in_Con_310900 OR D1008in_Con_007000]/ send Msg_Line_Status to P101inout; Internal_Msg_Opposite_Main_Signal_Status[D1001in_Con_007900 OR D1005in_Con_008800 OR D1006in_Con_310900 OR D1008in_Con_007000]/send Msg_Opposite_Main_Signal_Status to P101inout; Internal_Msg_Route_Monitoring_Status[D1007in_Con_007400 OR D1001in_Con_007900 OR D1002in_Con_008000 OR D1003in_Con_008200 OR D1004in_Con_008400 OR D1005in_Con_008800 OR D1006in_Con_310900 OR D1008in_Con_007000]/ send Msg_Route_Monitoring_Status to P101inout; Internal_Msg_Route_Pretest_Status[D1007in_Con_007400 OR D1008in_Con_007000]/send Msg_Route_Pretest_Status to P101inout; Internal_Msg_Route_Release_Inhibition_Status[D1007in_Con_007400]/send Msg_Route_Release_Inhibition_Status to P101inout; Internal_Msg_Route_Status/send Msg_Route_Status to P101inout; Internal_Msg_Signal_Status[D1007in_Con_007400 OR D1001in_Con_007900 OR D1002in_Con_008000 OR D1003in_Con_008200 OR D1004in_Con_008400 OR D1005in_Con_008800 OR D1006in_Con_310900 OR D1008in_Con_007000]/ send Msg_Signal_Status to P101inout; Internal_Msg_Train_Operated_Route_Release_Status/send Msg_Train_Operated_Route_Release_Status to P101inout; Internal_Msg_TVPS_Status/send Msg_TVPS_Status to P101inout; Internal_Cd_Abort_Route_Cancellation_Request[D1004in_Con_008400]/send Cd_Abort_Route_Cancellation_Request to P101inout; Internal_Msg_TDP_Status[D1004in_Con_008400]/send Msg_TDP_Status to P101inout;	This state machine diagram describes the requirements for the following functionalities: - send status messages to the communication partner during established PDI connection based on information of the internal logic - send commands to the communication partner during established PDI connection based on information of the internal logic	-	EUILS-276	**a_JIRA_BL4R3:** EUILS-276
Eu.ILS.4062	Def	Initial0		-		
Eu.ILS.4063	Def	/{Initial0 - SENDING_MESSAGES}		-		
Eu.ILS.4064	Def	SENDING_MESSAGES		-		
Eu.ILS.4098	Def	Internal_Cd_Access_Restriction_Request[D1007in_Con_007400 OR D1001in_Con_007900 OR D1003in_Con_008200 OR D1006in_Con_310900 OR D1008in_Con_007000]/ send Cd_Access_Restriction_Request to P101inout;{State-internal in SENDING_MESSAGES}		-		
Eu.ILS.4109	Def	Internal_Cd_Flank_Protection_Request[D1007in_Con_007400 OR D1001in_Con_007900 OR D1004in_Con_008400 OR D1005in_Con_008800 OR D1006in_Con_310900 OR D1008in_Con_007000]/send Cd_Flank_Protection_Request to P101inout;{State-internal in SENDING_MESSAGES}		-		
Eu.ILS.4112	Def	Internal_Cd_Route_Cancellation_Request[D1007in_Con_007400 OR D1001in_Con_007900 OR D1002in_Con_008000 OR D1003in_Con_008200 OR D1004in_Con_008400 OR D1005in_Con_008800 OR D1006in_Con_310900 OR D1008in_Con_007000]/ send Cd_Route_Cancellation_Request to P101inout;{State-internal in SENDING_MESSAGES}		-		
Eu.ILS.4113	Def	Internal_Cd_Route_Pretest_Request[D1007in_Con_007400 OR D1008in_Con_007000]/send Cd_Route_Pretest_Request to P101inout;{State-internal in SENDING_MESSAGES}		-		

© EULYNX Partners

ID	Type	Requirement Part 1	Requirement Part 2	Appl.	JIRA	V 4.3 (0.A) > V 4.2 (1.A)
Eu.ILS.4114	Def	Internal_Cd_Route_Release_Inhibition_Activation_Request[D1007in_Con_007400]/send Cd_Route_Release_Inhibition_Activation_Request to P101inout;{State-internal in SENDING_MESSAGES}		-		
Eu.ILS.4115	Def	Internal_Cd_Route_Request/send Cd_Route_Request to P101inout;{State-internal in SENDING_MESSAGES}		-		
Eu.ILS.4116	Def	Internal_Msg_Access_Restriction_Status[D1007in_Con_007400 OR D1001in_Con_007900 OR D1002in_Con_008000 OR D1003in_Con_008200 OR D1006in_Con_310900 OR D1008in_Con_007000]/ send Msg_Access_Restriction_Status to P101inout;{State-internal in SENDING_MESSAGES}		-		
Eu.ILS.4117	Def	Internal_Msg_Activation_Zone_Status/send Msg_Activation_Zone_Status to P101inout;{State-internal in SENDING_MESSAGES}		-		
Eu.ILS.4118	Def	Internal_Msg_Approach_Zone_Status[D1007in_Con_007400 OR D1001in_Con_007900 OR D1002in_Con_008000 OR D1003in_Con_008200 OR D1004in_Con_008400 OR D1005in_Con_008800 OR D1006in_Con_310900 OR D1008in_Con_007000]/ send Msg_Approach_Zone_Status to P101inout;{State-internal in SENDING_MESSAGES}		-		
Eu.ILS.4100	Def	Internal_Msg_Flank_Protection_Status[D1007in_Con_007400 OR D1001in_Con_007900 OR D1004in_Con_008400 OR D1005in_Con_008800 OR D1006in_Con_310900 OR D1008in_Con_007000]/ send Msg_Flank_Protection_Status to P101inout;{State-internal in SENDING_MESSAGES}		-		
Eu.ILS.4101	Def	Internal_Msg_Line_Direction_Control[D1007in_Con_007400 OR D1001in_Con_007900 OR D1002in_Con_008000 OR D1003in_Con_008200 OR D1004in_Con_008400 OR D1005in_Con_008800 OR D1006in_Con_310900 OR D1008in_Con_007000]/ send Msg_Line_Direction_Control to P101inout;{State-internal in SENDING_MESSAGES}		-		
Eu.ILS.4102	Def	Internal_Msg_Line_Status[D1007in_Con_007400 OR D1001in_Con_007900 OR D1002in_Con_008000 OR D1003in_Con_008200 OR D1004in_Con_008400 OR D1005in_Con_008800 OR D1006in_Con_310900 OR D1008in_Con_007000]/ send Msg_Line_Status to P101inout;{State-internal in SENDING_MESSAGES}		-		
Eu.ILS.4103	Def	Internal_Msg_Opposite_Main_Signal_Status[D1001in_Con_007900 OR D1005in_Con_008800 OR D1006in_Con_310900 OR D1008in_Con_007000]/send Msg_Opposite_Main_Signal_Status to P101inout;{State-internal in SENDING_MESSAGES}		-		
Eu.ILS.4104	Def	Internal_Msg_Route_Monitoring_Status[D1007in_Con_007400 OR D1001in_Con_007900 OR D1002in_Con_008000 OR D1003in_Con_008200 OR D1004in_Con_008400 OR D1005in_Con_008800 OR D1006in_Con_310900 OR D1008in_Con_007000]/ send Msg_Route_Monitoring_Status to P101inout;{State-internal in SENDING_MESSAGES}		-		
Eu.ILS.4105	Def	Internal_Msg_Route_Pretest_Status[D1007in_Con_007400 OR D1008in_Con_007000]/send Msg_Route_Pretest_Status to P101inout;{State-internal in SENDING_MESSAGES}		-		
Eu.ILS.4106	Def	Internal_Msg_Route_Release_Inhibition_Status[D1007in_Con_007400]/send Msg_Route_Release_Inhibition_Status to P101inout;{State-internal in SENDING_MESSAGES}		-		
Eu.ILS.4107	Def	Internal_Msg_Route_Status/send Msg_Route_Status to P101inout;{State-internal in SENDING_MESSAGES}		-		
Eu.ILS.4108	Def	Internal_Msg_Signal_Status[D1007in_Con_007400 OR D1001in_Con_007900 OR D1002in_Con_008000 OR D1003in_Con_008200 OR D1004in_Con_008400 OR D1005in_Con_008800 OR D1006in_Con_310900 OR D1008in_Con_007000]/ send Msg_Signal_Status to P101inout;{State-internal in SENDING_MESSAGES}		-		
Eu.ILS.4110	Def	Internal_Msg_Train_Operated_Route_Release_Status/send Msg_Train_Operated_Route_Release_Status to P101inout;{State-internal in SENDING_MESSAGES}		-		
Eu.ILS.4111	Def	Internal_Msg_TVPS_Status/send Msg_TVPS_Status to P101inout;{State-internal in SENDING_MESSAGES}		-		
Eu.ILS.4192	Def	Internal_Cd_Abort_Route_Cancellation_Request[D1004in_Con_008400]/send Cd_Abort_Route_Cancellation_Request to P101inout;{State-internal in SENDING_MESSAGES}		-		
Eu.ILS.4263	Def	Internal_Msg_TDP_Status[D1004in_Con_008400]/send Msg_TDP_Status to P101inout;{State-internal in SENDING_MESSAGES}		-	EUILS-276, EUILS-309	object created after baseline 4.2 (1.A)
Eu.ILS.1839	Info	S_SCI_ILS_National	The functional entity S_SCI_ILS_National represents the IM specific part of the interface. It complements the functional entity S_SCI_ILS and shall be defined by national requirements. An instance of S_SCI_ILS_National represents one boundary.	-		
Eu.ILS.3650	Req	[Block] S_SCI_ILS_National [Functional Viewpoint - Interface Requirements - Functional Entity] 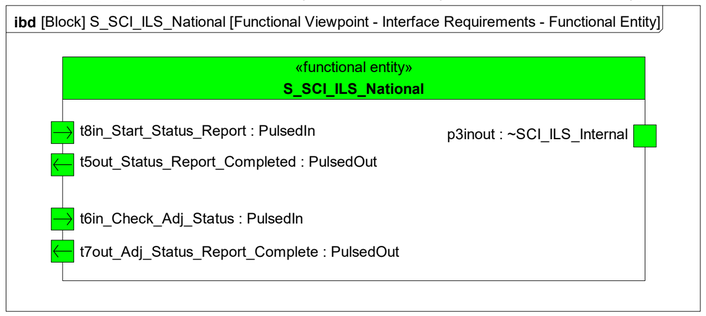 		-		
Eu.ILS.4075	Def	p3inout		-		
Eu.ILS.1848	Def	t5out_Status_Report_Completed		-		
Eu.ILS.3839	Def	t6in_Check_Adj_Status		-		
Eu.ILS.3840	Def	t7out_Adj_Status_Report_Complete		-		
Eu.ILS.3891	Def	t8in_Start_Status_Report		-		
Eu.ILS.1304	Head	**4 Configuration requirements**		Default		
Eu.ILS.1310	Info	The SCI-ILS uses several configurable interface elements which shall be used. These are described below.		Default		

ID	Type	Requirement Part 1	Requirement Part 2	Appl.	JIRA	V 4.3 (0.A) > V 4.2 (1.A)
Eu.ILS.1318	Head	**4.1 Boundary**		Default		
Eu.ILS.1308	Info	A boundary is a configurable interface element which marks the interlocking system boundary for one track. It represents the end of one interlocking system area and the beginning of the other interlocking system area. The boundary is located at the end of the TVPS of the one interlocking and at the beginning of the TVPS of the other interlocking.		Default		
Eu.ILS.1320	Req	Boundaries shall be unambiguously identifiable with an identifier defined by national requirements. Further information about the identifier is given in [Eu.Doc.42].		Default		
Eu.ILS.1319	Req	One boundary shall be defined and configured for each track which leaves the area of an interlocking system and enters the area of the adjacent interlocking system.		Default		
Eu.ILS.1328	Req	The following track and interface elements shall be unambiguously identifiable with a boundary, because a boundary is needed to address these uniquely for each track. • direction • access restriction to the track section • line status message for adjacent interlocking • flank protection element adjacent to the boundary • signal in advance of the boundary • TVPS adjacent to the boundary		Default		
Eu.ILS.4006	Req	The following track and interface elements shall be unambiguously identifiable with a boundary combined with an unique identifier of the operational element. • route • overlap • activation zone for level crossing across the boundary • approach zone status message for adjacent interlocking • route monitoring message for adjacent interlocking		Default		
Eu.ILS.1321	Info	Further general information about interlocking system boundaries given in chapter 7 of [Eu.Doc.10].		Default		
Eu.ILS.1340	Head	**4.2 Direction**		Default		
Eu.ILS.1327	Info	The direction is a configurable interface element which defines the direction for one track across one boundary.		Default		
Eu.ILS.1341	Req	Directions shall be used for applications on the line only.		Default		
Eu.ILS.1342	Req	The following values for the direction shall be used for configuration. • entry • exit		Default		
Eu.ILS.1324	Head	**4.3 Route**		Default		
Eu.ILS.1307	Req	A route shall be identified unambiguously with an identifier defined by national requirements. Further information about the identifier is given in [Eu.Doc.42].		Default		
Eu.ILS.1325	Head	**4.4 Overlap**		Default		
Eu.ILS.1309	Req	An overlap shall be identified unambiguously with an identifier defined by national requirements. Further information about the identifier is given in [Eu.Doc.42].		Default		
Eu.ILS.1322	Head	**4.5 Activation Zone**		Default		
Eu.ILS.1305	Req	An activation zone shall be identified unambiguously with an identifier defined by national requirements. Further information about the identifier is given in [Eu.Doc.42].		Default		
Eu.ILS.1323	Head	**4.6 Approach Zone**		Default		
Eu.ILS.1306	Req	An approach zone shall be identified unambiguously with an identifier defined by national requirements. Further information about the identifier is given in [Eu.Doc.42].		Default		

© EULYNX Partners